DELAWARE COUNTY REGIONAL SEWER DISTRICT
50 CHANNING STREET, DELAWARE, OHIO 43015

OHIO UTILITIES PROTECTION SERVICE		OHIO OIL & GAS PRODUCERS UNDERGROUND PROTECTION SERVICE
BEFORE YOU DIG ANYWHERE IN OHIO! CALL 1-800-362-2764 OR 8-1-1 (TOLL FREE) OHIO LAW REQUIRES 48 HOURS BUT NO MORE THAN 10 WORKING DAYS NOTICE TO UTILITIES BEFORE YOU EXCAVATE, DRILL, BLAST OR DEMOLISH (NON MEMBERS MUST BE CALLED DIRECTLY) WWW.OUPS.ORG	OHIO Utilities Protection SERVICE Call Before You Dig	TWO WORKING DAYS BEFORE YOU DIG CALL 1-800-925-0988 (TOLL FREE) WWW.OGPUPS.COM

THIS IS TO CERTIFY THAT GOOD ENGINEERING PRACTICES HAVE BEEN UTILIZED IN THE DESIGN OF THIS PROJECT AND THAT ALL OF THE MINIMUM STANDARDS FOR DELAWARE COUNTY HAVE BEEN MET, INCLUDING THOSE STANDARDS GREATER THAN MINIMUM WHERE, IN MY OPINION, THEY ARE NEEDED TO PROTECT THE SAFETY OF THE PUBLIC. ANY VARIANCES TO THE ABOVE STANDARDS ARE CONSISTENT WITH SOUND ENGINEERING PRACTICES AND ARE NOT DETRIMENTAL TO THE PUBLIC SAFETY AND CONVENIENCE." THESE VARIANCES HAVE BEEN LISTED HEREIN AND HAVE BEEN APPROVED BY THE DELAWARE COUNTY SANITARY ENGINEER.

N

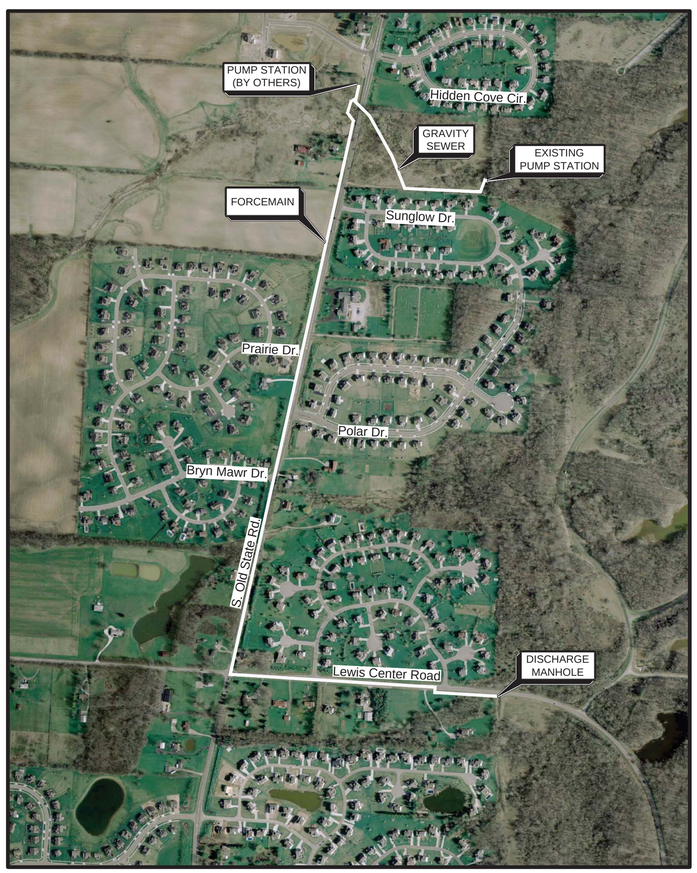

PEACHBLOW PUMP STATION AND FORCEMAIN UPGRADE PROJECT

FORCEMAIN AND GRAVITY SEWER

PROJECT NO.
10062733

DELAWARE COUNTY, OH
SEPTEMBER 18, 2020

APPROVALS

SIGNATURES FOR CONCURRENCE ONLY, TECHNICAL DETAILS ARE RESPONSIBILITY OF ENGINEER

APPROVED THIS 3rd DAY OF March, 2020 _____
DELAWARE COUNTY SANITARY ENGINEER

APPROVED THIS 24th DAY OF August, 2020 _____
DELAWARE COUNTY ENGINEER

APPROVED THIS 31st DAY OF August, 2020 _____
DELAWARE COUNTY COMMISSIONER

APPROVED THIS 31st DAY OF August, 2020 _____
DELAWARE COUNTY COMMISSIONER

APPROVED THIS _____ DAY OF _____, 2020 _____
APPROVED BY LETTER:
OHIO ENVIRONMENTAL PROTECTION AGENCY

STATE OF OHIO
LEE C. TOUREK
PE.78930
REGISTERED
PROFESSIONAL ENGINEER
9/18/2020

RECORD DOCUMENT

THE ORIGINAL CONTRACT DOCUMENTS, PREPARED BY HDR (ENGINEER), HAVE BEEN MODIFIED TO INCORPORATE FIELD CHANGES MADE BY THE CONTRACTOR BASED ON AS-BUILT REDLINES PROVIDED BY THE CONTRACTOR AND OTHER DATA ASSOCIATED WITH CHANGES IN THE WORK AUTHORIZED BY THE CLIENT. THE ENGINEER REPRESENTS THAT THESE RECORD DRAWINGS HAVE BEEN PREPARED ON THE BASIS OF THIS INFORMATION PROVIDED TO THE ENGINEER, BUT MAKES NO REPRESENTATIONS AS TO THE ACCURACY OR COMPLETENESS OF SUCH INFORMATION.

INDEX OF DRAWINGS

SHEET #	DESCRIPTION
GENERAL (G)	
G-01	DRAWING LIST AND GENERAL NOTES
G-02	INDEX SHEET
G-03	SURVEY CONTROL PLAN
G-04	STANDARD DETAILS
G-05	STANDARD DETAILS
G-06	STANDARD DETAILS
G-07	STANDARD DETAILS
G-08	EROSION AND SEDIMENTATION CONTROL DETAILS
CIVIL (C)	
C-01	CIVIL LEGEND
C-02 - C-10	FORCEMAIN PLAN AND PROFILE
C-11 - C-12	GRAVITY SEWER PLAN AND PROFILE
C-13	TABLES

SURVEY LEGEND

- 900 — MAJOR CONTOUR
- MINOR CONTOUR
- EXISTING EASEMENT
- PROPOSED EASEMENT
- R / W — RIGHT OF WAY
- EXISTING PAVEMENT
- t — PROPERTY LINE
- WOODLINE
- OVERHEAD ELECTRICAL LINE
- GAS LINE
- 12" WATER LINE
- TREE
- S — MANHOLE
- V — AIR RELEASE VALVE
- M — METER PIT
- STREAM
- LANDSCAPING
- WETLAND

NOTES:

1. SURVEY COMPLETED BY AMERICAN STRUCTUREPOINT OF COLUMBUS, OHIO.
2. SEE SHEET G-03 FOR SITE SURVEY CONTROL PLAN.

GENERAL NOTES

1. THE CURRENT COUNTY OF DELAWARE REQUIREMENTS, TOGETHER WITH THE SPECIFICATIONS OF THE STATE OF OHIO DEPARTMENT OF TRANSPORTATION, INCLUDING ALL SUPPLEMENTS THERETO, AND THE DELAWARE COUNTY REGIONAL SEWER DISTRICT CONSTRUCTION AND MATERIAL SPECIFICATIONS AND STANDARD DRAWINGS, AND SUPPLEMENTAL SPECIFICATIONS LISTED IN THE PROJECT MANUAL SHALL GOVERN ALL MATERIALS, METHODS OF CONSTRUCTION AND WORKMANSHIP INVOLVED IN THE IMPROVEMENTS THAT ARE A PART OF THIS PLAN SET, UNLESS OTHERWISE NOTED.
2. A PRE-CONSTRUCTION CONFERENCE SCHEDULED BY THE SANITARY ENGINEER SHALL BE HELD PRIOR TO ANY WORK STARTING. IN ADDITION, THE CONTRACTOR SHALL PROVIDE 48 HOUR NOTICE TO THE SANITARY ENGINEER, THE AUTHORITY, AND ALL NECESSARY UTILITIES PRIOR TO BEGINNING THE WORK TO ARRANGE FOR INSPECTION. ALSO, NOTIFY THE DELAWARE COUNTY ENGINEER'S OFFICE CHIEF INSPECTOR, DAN JENNINGS, AT 740-833-2441, 48 HOURS PRIOR TO THE PRE-CONSTRUCTION MEETING.
3. THE CONTRACTOR SHALL TOTALLY FAMILIARIZE THEMSELVES WITH THE GROUND CONDITIONS THAT NOW DO OR MAY EXIST DURING THE CONSTRUCTION SO AS NOT TO ADVERSELY AFFECT THE INTEGRITY OF ANY UTILITY INSTALLATION OR TO ADJACENT PROPERTIES OR STRUCTURES.
4. THE CONTRACTOR SHALL BE RESPONSIBLE FOR DAMAGES TO EXISTING STRUCTURES, SUBGRADE PIPING, OR PROPERTY AND SHALL REPAIR OR REPLACE ALL DAMAGES AT HIS OWN EXPENSE.
5. DAMAGE TO PROPERTY OUTSIDE OF CONSTRUCTION EASEMENTS AND OWNER PROPERTY SHALL BE RESTORED AT THE CONTRACTOR'S COST.
6. ALL DISTURBED PROPERTY SHALL BE RESTORED TO ITS PRE-CONSTRUCTION CONDITION, AS NEAR AS POSSIBLE WITHIN 21 DAYS OF DISTURBANCE.
7. EASEMENT BOUNDARIES ARE SHOWN FOR GENERAL LOCATION ONLY AND ARE BASED ON AVAILABLE PLAT INFORMATION.
8. CONTRACTOR SHALL ADJUST MANHOLE RIMS TO BE FLUSH WITH FINAL PAVEMENT GRADE AS NECESSARY IN PAVED AREAS.
9. ANY MODIFICATIONS TO THE WORK AS SHOWN ON THESE DRAWINGS SHALL HAVE PRIOR WRITTEN APPROVAL BY THE SANITARY ENGINEER.
10. THE CONTRACTOR IS RESPONSIBLE FOR THE INVESTIGATION, LOCATION, SUPPORT, PROTECTION, AND RESTORATION OF ALL EXISTING UTILITIES AND APPURTENANCES WHETHER SHOWN ON THESE PLANS OR NOT. THE CONTRACTOR SHALL EXPOSE ALL UTILITIES OR STRUCTURES PRIOR TO CONSTRUCTION TO VERIFY THE VERTICAL AND HORIZONTAL EFFECT ON PROPOSED CONSTRUCTION. THE CONTRACTOR SHALL CALL, TOLL FREE, THE OHIO UTILITIES PROTECTION SERVICE (1-800-362-2764) FORTY-EIGHT (48) HOURS PRIOR TO CONSTRUCTION AND SHALL NOTIFY ALL UTILITY COMPANIES AT LEAST FORTY-EIGHT (48) HOURS PRIOR TO WORK IN THE VICINITY OF THEIR UNDERGROUND LINES. THE IDENTITY AND LOCATION OF THE EXISTING UNDERGROUND UTILITY FACILITIES KNOWN TO BE LOCATED IN THE CONSTRUCTION AREA HAVE BEEN SHOWN ON THE PLANS AS ACCURATELY AS PROVIDED BY THE OWNER OF THE UNDERGROUND UTILITY. THE SANITARY ENGINEER ASSUMES NO RESPONSIBILITY AS TO THE ACCURACY OR THE DEPTHS OF THE UNDERGROUND FACILITIES SHOWN ON THE PLANS.
11. THE CONTRACTOR SHALL CONFINE HIS ACTIVITIES TO THE PROJECT SITE UNDER DEVELOPMENT, EXISTING RIGHTS-OF-WAY, CONSTRUCTION EASEMENTS AND PERMANENT EASEMENTS, AND SHALL NOT TRESPASS UPON OTHER PRIVATE PROPERTY WITHOUT THE WRITTEN CONSENT OF THE PROPERTY OWNER.
12. COMPLIANCE WITH THE OCCUPATIONAL SAFETY AND HEALTH ACT OF 1970, AS AMENDED, AND APPLICABLE OSHA REGULATIONS IS REQUIRED OF ALL CONTRACTORS ON THE PROJECT. EACH CONTRACTOR AND SUBCONTRACTOR IS RESPONSIBLE FOR IMPLEMENTING, MAINTAINING, AND SUPERVISING ALL SAFETY REQUIREMENTS, PRECAUTIONS, AND PROGRAMS IN CONNECTION WITH THE WORK.
13. THE TRACKING OF MUD, DIRT, AND DEBRIS UPON ANY PUBLIC ROADWAY IS PROHIBITED AND ANY SUCH OCCURRENCE SHALL BE CLEANED UP IMMEDIATELY BY THE CONTRACTOR. THE CONTRACTOR SHALL CLEAN UP ALL DEBRIS AND MATERIALS RESULTING FROM CONSTRUCTION OPERATIONS AND RESTORE ALL SURFACES, STRUCTURES, DITCHES, AND PROPERTY TO ITS ORIGINAL CONDITION AND TO THE SATISFACTION OF THE SANITARY ENGINEER.
14. ANY TREES OR LANDSCAPING IN EXISTING EASEMENTS OR PUBLIC RIGHT-OF-WAY SHALL BE PROTECTED AND NOT IMPACTED BY CONSTRUCTION ACTIVITIES UNLESS PRIOR APPROVAL IS OBTAINED BY THE SANITARY ENGINEER. ANY TREES OR LANDSCAPING THAT ARE APPROVED TO BE REMOVED ARE REQUIRED TO BE REPLACED TO THE SATISFACTION OF THE SANITARY ENGINEER.
15. THE CONTRACTOR SHALL OBTAIN ANY AND ALL NECESSARY PERMITS PRIOR TO BEGINNING CONSTRUCTION. ALL WORK SHALL BE PERFORMED IN ACCORDANCE WITH THE APPLICABLE FEDERAL, STATE, AND LOCAL REGULATIONS AND REQUIREMENTS.
16. SEDIMENT AND EROSION CONTROL. THE CONTRACTOR SHALL SUBMIT A COPY OF THE STORMWATER POLLUTION PREVENTION PLAN (SWPPP) TO THE SANITARY ENGINEER THAT HAS BEEN APPROVED BY THE GOVERNING STORM WATER AUTHORITY (I.E., DELAWARE COUNTY ENGINEER'S OFFICE, CITY OF POWELL, VILLAGE OF SUNBURY, ETC.) PRIOR TO THE PRE-CONSTRUCTION MEETING FOR THE FORCEMAIN AND GRAVITY SEWER. ADDITIONAL EROSION AND SEDIMENTATION CONTROLS MAY BE REQUIRED AT THE DISCRETION OF THE SANITARY ENGINEER BEFORE AND/OR DURING CONSTRUCTION ACTIVITIES.

SANITARY SEWER NOTES

1. ALL SANITARY SEWERS SHALL BE SEPARATED A MINIMUM OF 10 FEET HORIZONTALLY AND 1.5 FEET VERTICALLY FROM ALL WATER MAINS AND STORM SEWERS.
2. WHEREVER A SANITARY SEWER MUST CROSS AN EXISTING WATER MAIN, THE ELEVATION OF THE CROWN OF THE SEWER SHALL BE AT LEAST 1.5 FEET MINIMUM, MEASURED BETWEEN THE OUTSIDE PIPE WALLS, BELOW THE BOTTOM OF THE WATER MAIN.
3. THERE SHALL BE NO STORM OR CLEAN WATER CONNECTIONS TO THE SANITARY SEWER (ROOF DRAINS, FOOTER DRAINS, ETC.)
4. ANY FIELD TILE DISTURBED DURING CONSTRUCTION SHALL BE REPLACED AS DIRECTED BY THE SANITARY ENGINEER WITH PVC PIPE SPANNING THE TRENCH. THE TRENCH SHALL BE FILLED WITH COMPACTED GRANULAR BACKFILL.
5. SEWER TRENCHES SHALL BE DE-WATERED TO 2 INCHES BELOW THE BELL OF PIPE PRIOR TO INSTALLATION OF PIPE.
6. FINISH GRADE AT ALL SANITARY MANHOLES SHALL BE AT LEAST 6 INCHES BELOW TOP OF CASTING TO AVOID UNNECESSARY INFILTRATION INTO THE SANITARY SEWER SYSTEM.
7. BACKFILL SHALL BE INSTALLED PER TYPICAL TRENCH DETAIL SA.S-2.
8. CONTRACTOR SHALL INSTALL PLUGS IN THE UPSTREAM AND DOWNSTREAM INVERTS OF THE CONNECTION MANHOLE. THE PLUGS SHALL BE INSPECTED BY THE CONTRACTOR ON A WEEKLY BASIS AND AFTER RAINFALL EVENTS.
9. SANITARY SEWERS SHALL BE TESTED BY AIR AND/OR EXFILTRATION TESTS. CONTRACTOR SHALL COOPERATE WITH THE SANITARY ENGINEER AND PROVIDE ALL NECESSARY EQUIPMENT TO PERFORM THE TESTING.
10. SANITARY MANHOLES SHALL BE VACUUM TESTED.
11. WHEN PVC PIPE IS USED A DEFLECTION TEST SHALL BE PERFORMED. PIPE DEFLECTION SHALL NOT EXCEED 5 PERCENT IF TESTED AFTER 30 DAYS, OR 7.5 PERCENT IF TESTED AFTER 90 DAYS FROM THE TRENCH BEING BACKFILLED TO FINISH GRADE. THE METHOD OF TESTING SHALL BE SUBJECT TO THE APPROVAL OF THE SANITARY ENGINEER. IF RIGID BALLS OR MANDRELS ARE USED TO TEST THE PIPE DEFLECTION, NO MECHANICAL PULLING DEVICES SHALL BE USED. ANY LINES WHICH FAIL THE TEST MUST BE REPAIRED AND RETESTED BY THE CONTRACTOR AT NO COST TO THE DCRSD.
12. ALL SANITARY MANHOLE CASTINGS SHALL BE STAMPED "DELAWARE COUNTY REGIONAL SEWER DISTRICT". ALL CASTINGS WATERTIGHT MANHOLES SHALL HAVE A T-GASKET AND CONCEALED PICK HOLES. ALL SANITARY MANHOLE CASTINGS SHALL BE NEENAH R-1760A WITH "DELAWARE COUNTY REGIONAL SEWER DISTRICT" CAST IN THE LID.
13. THE FOLLOWING SET OF TOOLS AND SPARE PARTS SHALL BE DELIVERED TO THE SANITARY ENGINEER'S OFFICE PRIOR TO FINAL ACCEPTANCE OF THE PROJECT: FIVE (5) CONCRETE GRADE RINGS; ONE (1) MANHOLE LIFTING HOOK; AND ONE (1) COMPLETE MANHOLE CASTING (FRAME AND LID). AN ADDITIONAL SET OF SPARE PARTS SHALL BE PROVIDED FOR EVERY TEN (10) MANHOLES.
14. SANITARY MANHOLES SHALL BE MARKED PER DETAIL SA.S-9.
15. INSTALL TRENCH DAMS WHERE SHOWN ON THE DRAWINGS PER DETAIL 2 ON SHEET G-06.

PROHIBITED CONSTRUCTION ACTIVITIES

1. USING ANY SUBSTANCE OTHER THAN WATER TO CONTROL DUST.
2. TRACKING OF MUD, DIRT AND DEBRIS ONTO ANY PUBLIC ROADWAY.
3. OPEN BURNING OF PROJECT DEBRIS WITHOUT A PERMIT. THE CONTRACTOR IS RESPONSIBLE FOR OBTAINING THE PERMIT OR DISPOSING OF TREES AND STUMPS.
4. PUMPING OF SEDIMENT-LADEN WATER FROM TRENCHES OR OTHER EXCAVATIONS INTO ANY SURFACE WATERS, ANY STREAM CORRIDORS, ANY WETLANDS, OR STORM SEWERS.
5. DISCHARGING POLLUTANTS, SUCH AS CHEMICALS, FUELS, LUBRICANTS, BITUMINOUS MATERIALS, RAW SEWAGE, AND OTHER HARMFUL WASTE INTO OR ALONGSIDE RIVERS, STREAMS, IMPOUNDMENTS, OR INTO NATURAL OR MAN-MADE CHANNELS LEADING THERETO.
6. STORING CONSTRUCTION EQUIPMENT AND VEHICLES AND/OR STOCKPILING CONSTRUCTION MATERIALS ON PROPERTY, PUBLIC OR PRIVATE, NOT PREVIOUSLY SPECIFIED FOR SAID PURPOSES.
7. DISPOSING OF EXCESS OR UNSUITABLE EXCAVATED MATERIAL IN WETLANDS OR FLOODPLAINS, EVEN WITH THE PERMISSION OF THE PROPERTY OWNER.
8. INDISCRIMINATE, ARBITRARY, OR CAPRICIOUS OPERATION OF EQUIPMENT IN ANY STREAM CORRIDORS, WETLANDS, SURFACE WATERS, OR OUTSIDE THE EASEMENT AREA.
9. PERMANENT OR UNSPECIFIED ALTERATION OF THE FLOW LINE OF A STREAM.
10. REMOVAL OF TREES AND SHRUBS, OR DAMAGING VEGETATION OUTSIDE THE LIMITS OF THE CONSTRUCTION AREA.
11. DISPOSAL OF TREES, BRUSH AND OTHER DEBRIS IN STREAM CORRIDORS, WETLANDS, SURFACE WATERS, OR AT UNSPECIFIED LOCATIONS.

MAINTENANCE OF TRAFFIC

1. WHERE IT IS ANTICIPATED THAT WORK WILL CLOSE A ROAD, THE CONTRACTOR SHALL INFORM THE AGENCY IN CONTROL OF THE RIGHT-OF-WAY, THE LOCAL LAW ENFORCEMENT AGENCY, THE LOCAL FIRE DEPARTMENT, THE SANITARY ENGINEER, THE COUNTY SHERIFF'S DEPARTMENT, THE SCHOOL DISTRICT AS TO THE EXTENT, NATURE, AND TIME OF THE CLOSING.
2. THE CONTRACTOR SHALL SUBMIT A PLAN AND SCHEDULE FOR DETOURING TRAFFIC TEN (10) DAYS PRIOR TO THE CLOSING OF ANY ROAD. ANY TEMPORARY CLOSING OF A ROAD DOES NOT RELIEVE THE CONTRACTOR THE OF THE RESPONSIBILITY TO PROVIDE ACCESS TO THE PROPERTY BY EMERGENCY VEHICLES AND THE OWNERS.
3. NO ROAD SHALL BE CLOSED UNTIL THE SCHEDULE IS APPROVED BY THE SANITARY ENGINEER AND THE AGENCY IN CONTROL OF THE RIGHT-OF-WAY. NO EXISTING TRAFFIC FLOW SHALL BE ALTERED UNTIL THE CONTRACTOR SUBMITS IN WRITING A REQUEST FOR APPROVAL OF THE ALTERATION OF TRAFFIC. THE REQUEST SHALL BE DIRECTED TO THE SANITARY ENGINEER AND THE AGENCY IN CONTROL OF THE RIGHT-OF-WAY. APPROVAL SHALL BE CONSIDERED ONLY WHEN RECEIVED IN WRITING.

UTILITY CONTACT INFORMATION

THE FOLLOWING UTILITIES ARE LOCATED WITHIN THE WORK LIMITS OF THE PROJECT:

DELAWARE COUNTY ENGINEER'S OFFICE
ATTN: JERRY OWENS
50 CHANNING ST, DELAWARE, OH 43015
PHONE: 740-833-2433
EMAIL: JOWINGS@CO.DELAWARE.OH.US

SUBURBAN NATURAL GAS
ATTN: AARON ROLL
2626 LEWIS CENTER ROAD
LEWIS CENTER, OH 43035
PHONE: 740-548-2450
PHONE: AROLL@SNGCO.COM

AEP
ATTN: PAUL PAXTON
700 MORRISON ROAD
GAHANNA, OH 43230
PHONE: 614-883-6831
EMAIL: PTPAXTON@AEP.COM

DEL CO WATER
ATTN: RUSTY GRIFFITH
6658 OLENTANGY RIVER ROAD
DELAWARE, OH 43015
PHONE: 740-548-7746 EXT. 2403
EMAIL: RGRIFFITH@DELCOWATER.COM

CONSOLIDATED ELECTRIC COOP
ATTN: BILL MARTIN
4993 STATE ROUTE 521
DELAWARE, OH 43015
PHONE: 740-360-7356
EMAIL: WMARTIN@CONSOLIDATED.COOP

FORCEMAIN NOTES

1. ALL BURIED PRESSURE PIPE SHALL BE RESTRAINED BY AN APPROVED METHOD. PROVIDE BACKING FOR BENDS AND TEES PER DETAILS SA.S-22, SA.S-23, AND SA.S-24 ON SHEET G-05.
2. METALLIC DETECTABLE UNDERGROUND 12-GAUGE WIRE SHALL BE INSTALLED BELOW AND WITHIN SIX (6) INCHES OF ALL SEWER FORCE MAINS. WIRE SHALL BE GREEN AS SPECIFIED BY APWA COLOR CODE. AT ALL VALVES, LINE BEGINNINGS AND ENDS, WIRE SHALL BE CLAMPED TO A THREE (3) FOOT PIECE OF REBAR WITH A BRASS CLAMP. THE REBAR SHALL BE SET VERTICALLY NEXT TO THE VALVE OR THE STRUCTURE AND STAND TWO (2) INCHES ABOVE GROUND. WIRE SHALL BE BROUGHT TO THE GROUND SURFACE EVERY 500 FEET OR AT ALL AIR RELEASE VALVES. LOCATIONS SHALL BE MARKED IN FIELD WITH A VALVE BOX MARKED "SEWER." SEE DETAIL 3 ON SHEET G-06.
3. METALLIC DETECTABLE UNDERGROUND MARKING TAPE SHALL BE INSTALLED ABOVE ALL SANITARY SEWER FORCE MAINS. TAPE SHALL BE GREEN AS SPECIFIED BY THE APWA COLOR CODE AND SHALL BE A MINIMUM OF THREE (3) INCHES IN WIDTH. THE TAPE SHALL BEAR THE WORDS "CAUTION...FORCE MAIN" PERMANENTLY PRINTED ON THE TAPE. TAPE SHALL BE INSTALLED 18 INCHES TO 24 INCHES BELOW GRADE.
4. AIR RELEASE MANHOLES SHALL BE MARKED PER DETAIL SA.S-9 ON SHEET G-05.
5. THERMAL BUTT-FUSION JOINTS COMPLYING WITH ASTM F2620.

PROTECTION OF PUBLIC

1. THE CONTRACTOR IS RESPONSIBLE FOR THE PROTECTION OF THE PUBLIC FROM ANY HAZARDS CAUSED BY THE CONSTRUCTION OF THIS PROJECT. THE CONTRACTOR SHALL PROVIDE SIGNS, BARRICADES, FENCING, PLATES, COVERS, ETC. NEEDED TO PROVIDE THIS PROTECTION. THE CONTRACTOR SHALL COMPLY WITH ALL FEDERAL, STATE, LOCAL LAWS AND REGULATIONS WITH RESPECT TO PROTECTING THE PUBLIC.

EARTHWORK NOTES

1. A SUBSURFACE GEOTECHNICAL INVESTIGATION AND REPORT HAS BEEN COMPLETED BY A CONSULTING GEOTECHNICAL ENGINEER FOR THE FORCEMAIN ALIGNMENT ONLY. THE REPORT IS AVAILABLE TO THE CONTRACTOR FOR REFERENCE.
2. A GEOTECHNICAL INVESTIGATION HAS NOT BEEN PERFORMED FOR THE GRAVITY SEWER ALIGNMENT. THE CONTRACTOR IS ENCOURAGED TO MAKE HIS OWN SUBSURFACE INVESTIGATION PRIOR TO CONSTRUCTION

DEWATERING NOTES

1. THE CONTRACTOR SHALL SUBMIT A DEWATERING PLAN TO THE ENGINEER FOR APPROVAL PRIOR TO BEGINNING ANY WORK.

RECORD DOCUMENT

THE ORIGINAL CONTRACT DOCUMENTS, PREPARED BY HDR (ENGINEER), HAVE BEEN MODIFIED TO INCORPORATE FIELD CHANGES MADE BY THE CONTRACTOR BASED ON AS-BUILT REDLINES PROVIDED BY THE CONTRACTOR AND OTHER DATA ASSOCIATED WITH CHANGES IN THE WORK AUTHORIZED BY THE CLIENT. THE ENGINEER REPRESENTS THAT THESE RECORD DRAWINGS HAVE BEEN PREPARED ON THE BASIS OF THIS INFORMATION PROVIDED TO THE ENGINEER, BUT MAKES NO REPRESENTATIONS AS TO THE ACCURACY OR COMPLETENESS OF SUCH INFORMATION.

ISSUE	DATE	DESCRIPTION
	02-07-2024	AS-BUILT

PROJECT MANAGER	KYLE SCHWIETERMAN
DESIGN BY	LCT
DRAWN BY	VKN
APPROVED BY	DLM
PROJECT NUMBER	10062733

DELAWARE COUNTY REGIONAL SEWER DISTRICT
50 CHANNING STREET, DELAWARE, OHIO 43015

PEACHBLOW PUMP STATION AND FORCEMAIN UPGRADE PROJECT

FORCEMAIN AND GRAVITY SEWER

GENERAL

DRAWING INDEX AND GENERAL NOTES

0 30' 60'
SCALE: 1"=30'

FILENAME: G-01.DWG
SCALE: NOT TO SCALE

SHEET
G-01

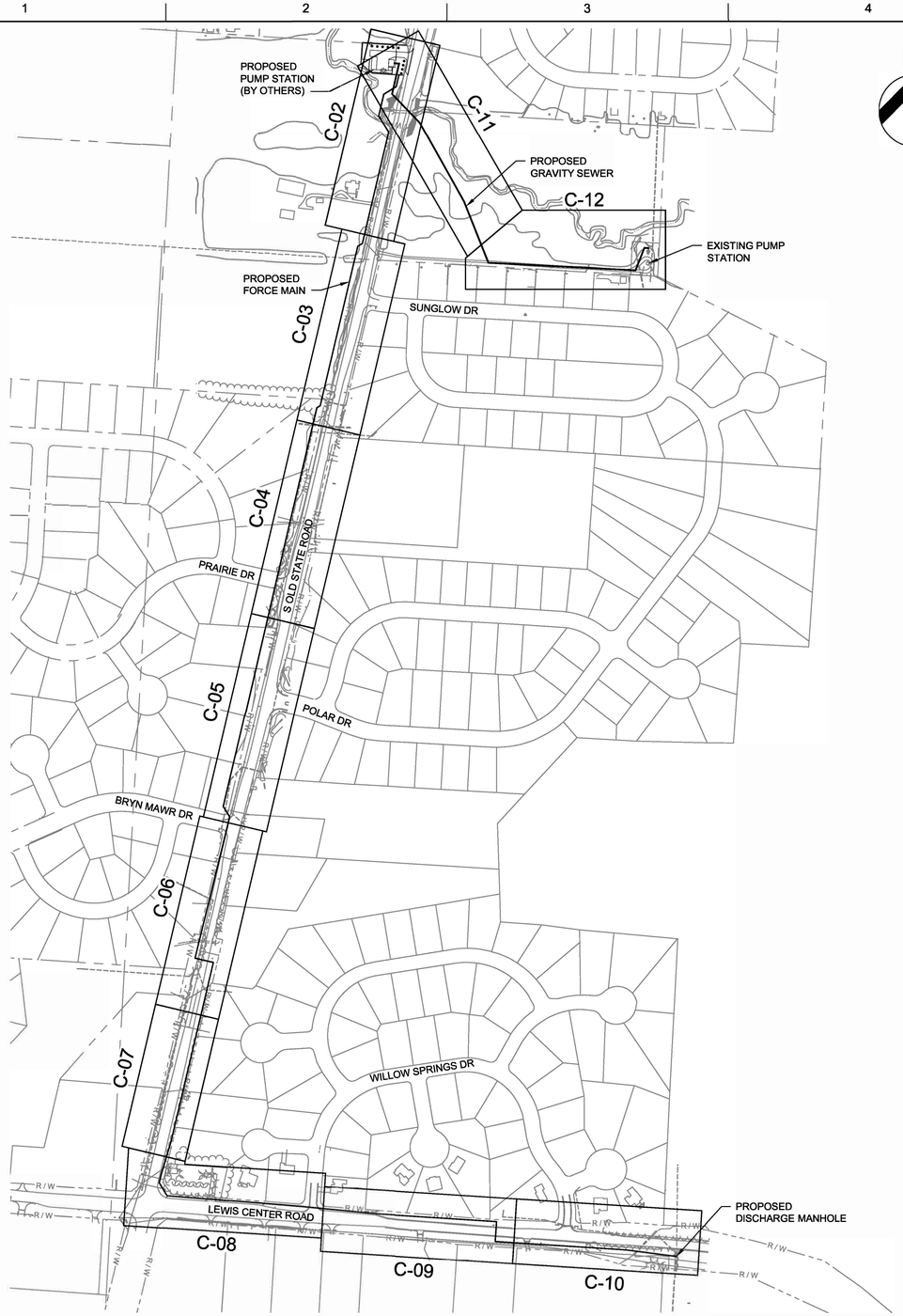

RECORD DOCUMENT

THE ORIGINAL CONTRACT DOCUMENTS, PREPARED BY HDR (ENGINEER), HAVE BEEN MODIFIED TO INCORPORATE FIELD CHANGES MADE BY THE CONTRACTOR BASED ON AS-BUILT REDLINES PROVIDED BY THE CONTRACTOR AND OTHER DATA ASSOCIATED WITH CHANGES IN THE WORK AUTHORIZED BY THE CLIENT. THE ENGINEER REPRESENTS THAT THESE RECORD DRAWINGS HAVE BEEN PREPARED ON THE BASIS OF THIS INFORMATION PROVIDED TO THE ENGINEER, BUT MAKES NO REPRESENTATIONS AS TO THE ACCURACY OR COMPLETENESS OF SUCH INFORMATION.

ISSUE	DATE	DESCRIPTION
	02-07-2024	AS-BUILT

PROJECT MANAGER	KYLE SCHWIETERMAN
DESIGN BY	LCT
DRAWN BY	VKN
APPROVED BY	DLM
PROJECT NUMBER	10062733

DELAWARE COUNTY REGIONAL SEWER DISTRICT
50 CHANNING STREET, DELAWARE, OHIO 43015

PEACHBLOW PUMP STATION AND FORCEMAIN UPGRADE PROJECT

FORCEMAIN AND GRAVITY SEWER

GENERAL

INDEX SHEET

0 30' 60'
SCALE: 1"=30'

FILENAME G-02.DWG
SCALE NOT TO SCALE

SHEET
G-02

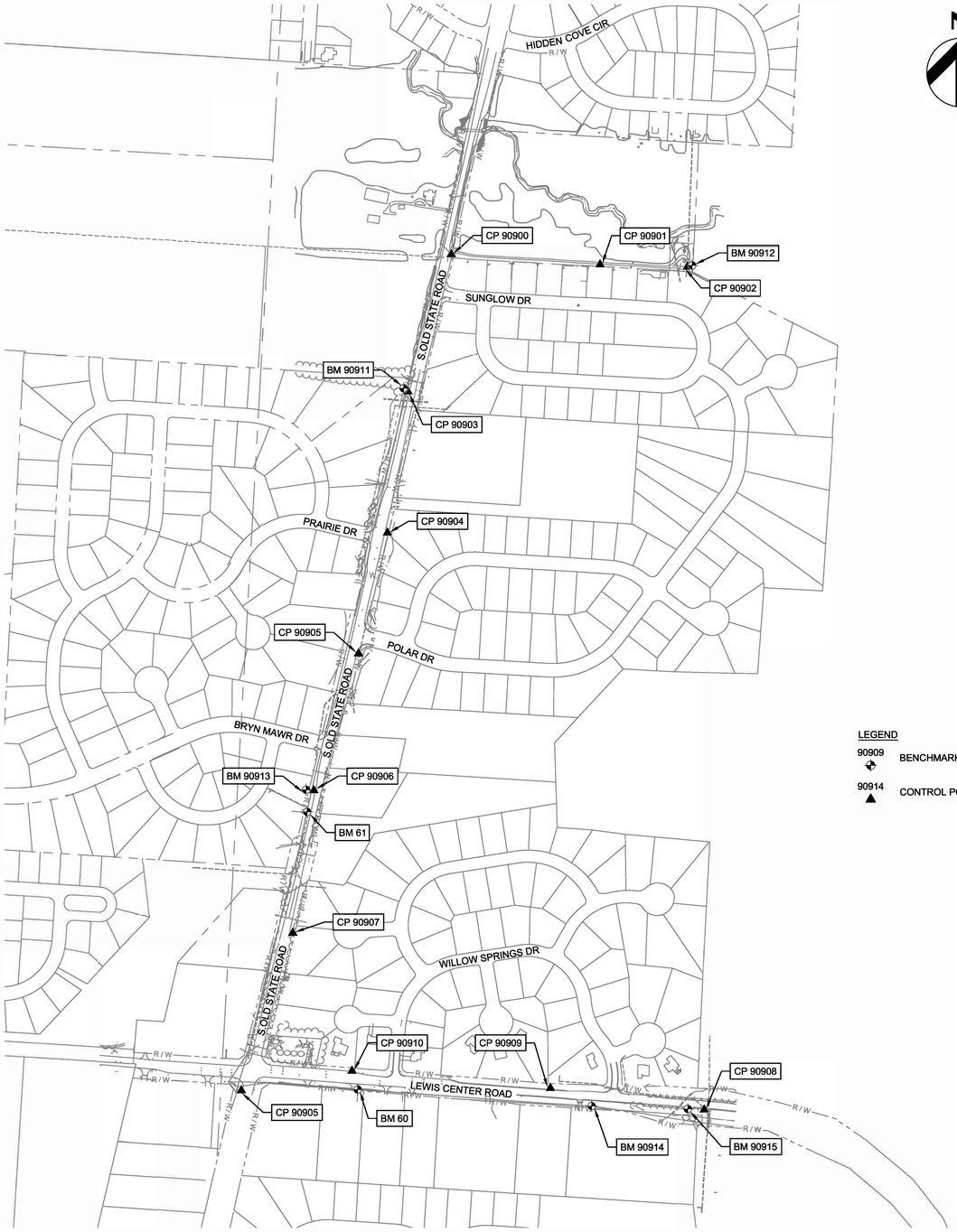

N

LEGEND

90909 BENCHMARK

90914 CONTROL POINT

HORIZONTAL CONTROL
REFERENCE FRAME: NAD 1983 (2011)
ELLIPSOID: GRS80
MAP PROJECTION: LAMBERT CONFORMAL CONIC
COORDINATE SYSTEM: OHIO (NORTH)
COMBINED FACTOR (GRID TO GROUND): 1.0000087997
ORIGIN OF COORDINATE SYSTEM: 0,0

NOTE: ALL COORDINATES LISTED BELOW ARE GROUND COORDINATES

VERTICAL CONTROL
DATUM: NAVD 1988
GEOID: GEOID 12B
ELEVATION SOURCE: GPS DERIVED FROM NGS OPUS SOLUTION ON ORIGINAL CONTROL POINT 900, LEVEL CIRCUITS RUN TO ESTABLISH ALL OTHER ELEVATIONS FROM THE SOURCE.

CONTROL POINT 905 – IRON PIN SET WITH ASI TRAVERSE CAP
LOCATED AT THE SOUTHWEST QUADRANT OF THE LEWIS CENTER ROAD/S. OLD STATE ROAD INTERSECTION
NORTHING: 194032.793 | EASTING: 1831572.754 | ELEVATION: 939.99'

CONTROL POINT 90900 – IRON PIN SET WITH ASI TRAVERSE CAP
LOCATED AT THE INTERSECTION OF THE GRAVEL DRIVE TO THE EXISTING PUMP STATION AND S. OLD STATE ROAD
NORTHING: 197695.250 | EASTING: 1832492.165 | ELEVATION: 926.69'

CONTROL POINT 90901 – IRON PIN SET WITH ASI TRAVERSE CAP
LOCATED SOUTH OF THE PUMP STATION GRAVEL DRIVE, 660 FEET EAST OF S. OLD STATE ROAD
NORTHING: 197650.448 | EASTING: 1833143.610 | ELEVATION: 920.46'

CONTROL POINT 90902 – IRON PIN SET WITH ASI TRAVERSE CAP
LOCATED SOUTHEAST OF THE EXISTING PUMP STATION
NORTHING: 197640.894 | EASTING: 1833526.444 | ELEVATION: 907.72'

CONTROL POINT 90903 – IRON PIN SET WITH ASI TRAVERSE CAP
LOCATED ON THE WEST SIDE OF S. OLD STATE ROAD, 450' SOUTH OF SUNGLOW DRIVE
NORTHING: 197094.432 | EASTING: 1832302.285 | ELEVATION: 926.62'

CONTROL POINT 90904 – IRON PIN SET WITH ASI TRAVERSE CAP
LOCATED ON THE EAST SIDE OF S. OLD STATE ROAD, ACROSS FROM PRAIRIE DRIVE
NORTHING: 196475.494 | EASTING: 1832212.700 | ELEVATION: 932.04'

CONTROL POINT 90905 – IRON PIN SET WITH ASI TRAVERSE CAP
LOCATED ON THE EAST SIDE OF S. OLD STATE ROAD, 80' SOUTH OF POLAR DRIVE
NORTHING: 195946.712 | EASTING: 1832085.826 | ELEVATION: 931.61'

CONTROL POINT 90906 – IRON PIN SET WITH ASI TRAVERSE CAP
LOCATED ON THE WEST SIDE OF S. OLD STATE ROAD, 200' SOUTH OF BRYN MAWR DRIVE
NORTHING: 195347.477 | EASTING: 1831890.102 | ELEVATION: 929.68'

CONTROL POINT 90907 – IRON PIN SET WITH ASI TRAVERSE CAP
LOCATED ON THE EAST SIDE OF S. OLD STATE ROAD, 635' NORTH OF LEWIS CENTER ROAD
NORTHING: 194724.924 | EASTING: 1831798.209 | ELEVATION: 933.51'

CONTROL POINT 90908 – IRON PIN SET WITH ASI TRAVERSE CAP
LOCATED ON THE SOUTH SIDE OF LEWIS CENTER ROAD, 400' EAST OF WILLOW SPRINGS DRIVE
NORTHING: 193948.557 | EASTING: 1833599.547 | ELEVATION: 918.55'

CONTROL POINT 90909 – IRON PIN SET WITH ASI TRAVERSE CAP
LOCATED ON THE NORTH SIDE OF LEWIS CENTER ROAD, 280' WEST OF WILLOW SPRINGS DRIVE
NORTHING: 194043.343 | EASTING: 1832925.924 | ELEVATION: 929.19'

CONTROL POINT 90910 – IRON PIN SET WITH ASI TRAVERSE CAP
LOCATED ON THE NORTH SIDE OF LEWIS CENTER ROAD, 430' EAST OF S. OLD STATE ROAD
NORTHING: 194118.843 | EASTING: 1832057.099 | ELEVATION: 936.86'

BENCHMARK 60
CHISELED SQUARE ON THE NORTHEAST CORNER OF A CATCH BASIN ON THE WEST SIDE OF S. OLD STATE ROAD 215' NORTH OF AVONLEA WAY/HIDDEN COVE CIRCLE, LOCATED 82' SOUTH OF THE MAILBOX FOR 4730 S. OLD STATE ROAD, 3' WEST OF THE WEST EDGE OF PAVEMENT FOR S. OLD STATE ROAD.
ELEVATION: 929.67'

BENCHMARK 61
CHISELED SQUARE ON THE NORTHEAST CORNER OF A CATCHBASIN AT THE SOUTHWEST QUADRANT OF THE INTERSECTION OF S. OLD STATE ROAD AND PRAIRIE DRIVE, 1.5 MILES SOUTH OF PEACHBLOW ROAD, ON THE WEST SIDE OF S. OLD STATE ROAD, LOCATED 10' WEST OF THE WEST BACK OF CURB AND 30' NORTHEAST OF THE NORTHEAST CORNER OF THE BRICK BRYN MAWR SIGN.
ELEVATION: 933.01'

BENCHMARK 90911
MAG SPIKE SET IN UTILITY POLE LOCATED ON THE WEST SIDE OF S. OLD STATE ROAD 470 FEET SOUTH OF SUNGLOW DRIVE, LOCATED 21 FEET SOUTH OF CONTROL POINT 90903, 12' WEST OF THE WEST EDGE OF PAVEMENT FOR S. OLD STATE ROAD. ELEVATION: 927.65'

BENCHMARK 90912
MAG SPIKE IN A UTILITY POLE LOCATED AT THE SOUTHWEST CORNER OF THE EXISTING PUMP STATION SITE. ELEVATION: 908.68'

BENCHMARK 90913
MAG SPIKE SET IN A UTILITY POLE ON THE WEST SIDE OF S. OLD STATE ROAD 300' SOUTH OF BRYN MAWR DRIVE, LOCATED 99' SOUTH OF CONTROL POINT 90906, 17' WEST OF THE WEST EDGE OF PAVEMENT FOR S. OLD STATE ROAD. ELEVATION: 928.83'

BENCHMARK 90914
MAG SPIKE SET IN A UTILITY BRACE POLE ON THE SOUTH SIDE OF LEWIS CENTER ROAD 435' EAST OF BEECHMONT DRIVE, ON THE EAST SIDE OF THE CONCRETE DRIVEWAY TO RES. #2946, 28' SOUTH OF THE SOUTH EDGE OF PAVEMENT FOR LEWIS CENTER ROAD.
ELEVATION: 932.48'

BENCHMARK 90915
MAG SPIKE SET IN THE TOP CENTER OF THE EASTERN-MOST WOODEN GUARDRAIL POST FOR THE GUARDRAIL LOCATED ON THE SOUTH SIDE OF LEWIS CENTER ROAD, 340' EAST OF WILLOW SPRINGS DRIVE, 5' SOUTH OF THE SOUTH EDGE OF PAVEMENT FOR LEWIS CENTER ROAD, 58' WEST OF CONTROL POINT 90908.
ELEVATION: 922.02'

RECORD DOCUMENT

THE ORIGINAL CONTRACT DOCUMENTS, PREPARED BY HDR (ENGINEER), HAVE BEEN MODIFIED TO INCORPORATE FIELD CHANGES MADE BY THE CONTRACTOR BASED ON AS-BUILT REDLINES PROVIDED BY THE CONTRACTOR AND OTHER DATA ASSOCIATED WITH CHANGES IN THE WORK AUTHORIZED BY THE CLIENT. THE ENGINEER REPRESENTS THAT THESE RECORD DRAWINGS HAVE BEEN PREPARED ON THE BASIS OF THIS INFORMATION PROVIDED TO THE ENGINEER, BUT MAKES NO REPRESENTATIONS AS TO THE ACCURACY OR COMPLETENESS OF SUCH INFORMATION.

ISSUE	DATE	DESCRIPTION
	02-07-2024	AS-BUILT

PROJECT MANAGER	KYLE SCHWIETERMAN
DESIGN BY	LCT
DRAWN BY	VKN
APPROVED BY	DLM
PROJECT NUMBER	10062733

DELAWARE COUNTY REGIONAL SEWER DISTRICT
50 CHANNING STREET, DELAWARE, OHIO 43015

PEACHBLOW PUMP STATION AND FORCEMAIN UPGRADE PROJECT

FORCEMAIN AND GRAVITY SEWER

GENERAL

SURVEY CONTROL PLAN

0 150' 300' 600'
SCALE: 1"=300'

FILENAME G-03.DWG
SCALE 1" = 300'

SHEET
G-03

NOTES:
1. ITEM NUMBERS REFER TO THE STATE OF OHIO DEPARTMENT OF TRANSPORTATION CONSTRUCTION AND MATERIAL SPECIFICATIONS.
2. AGGREGATE FOR BEDDING SHALL BE WASHED AND BE NO. 57 PER ITEM 304.01.
3. TYPE A BACKFILL SHALL BE GRANULAR MATERIAL AS SPECIFIED IN ODOT ITEM 703.11, GRANULAR MATERIAL, TYPE 2. SEE TYPICAL BACKFILL DETAIL Sa.S–2. COMPACTION SHALL MEET THE REQUIREMENTS OF ITEM 203.
4. TYPE B BACKFILL SHALL BE NATURAL SOIL FREE FROM STONES LARGER THAN 2" ACROSS THEIR GREATEST DIMENSION, TOPSOIL, VEGETATION, DEBRIS, RUBBISH OR FROZEN MATERIAL, COMPACTED TO 95% OF ITS MAXIMUM LABORATORY DRY WEIGHT.
5. THE EXCAVATED TRENCH WIDTH 12" ABOVE THE CONDUIT MAY BE INCREASED WITHOUT ADDITIONAL COMPENSATION.
6. FLEXIBLE PIPE SHALL INCLUDE PVC AND POLYPROPYLENE.
7. ENCASEMENT SHALL BE CLASS QC4 CONCRETE PER ODOT ITEM 499.
8. FOR TRENCHES BENEATH PUBLIC ROADS THAT EXCEED 100 FEET IN LENGTH, CONTACT THE DELAWARE COUNTY ENGINEER'S OFFICE FOR OTHER REQUIREMENTS.

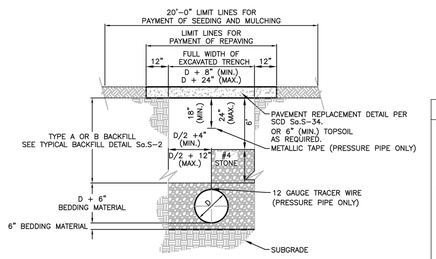

SECTION WITH BEDDING MATERIAL

RECORD DOCUMENT

THE ORIGINAL CONTRACT DOCUMENTS, PREPARED BY HDR (ENGINEER), HAVE BEEN MODIFIED TO INCORPORATE FIELD CHANGES MADE BY THE CONTRACTOR BASED ON AS-BUILT REDLINES PROVIDED BY THE CONTRACTOR AND OTHER DATA ASSOCIATED WITH CHANGES IN THE WORK AUTHORIZED BY THE CLIENT. THE ENGINEER REPRESENTS THAT THESE RECORD DRAWINGS HAVE BEEN PREPARED ON THE BASIS OF THIS INFORMATION PROVIDED TO THE ENGINEER, BUT MAKES NO REPRESENTATIONS AS TO THE ACCURACY OR COMPLETENESS OF SUCH INFORMATION.

TYPICAL TRENCH FOR FLEXIBLE PIPE	APPROVED: / DATE: / REVISION:	STANDARD CONSTRUCTION DRAWING	
	DRAWING NO. Sa.S–1	SHEET NO. 2 of 2	

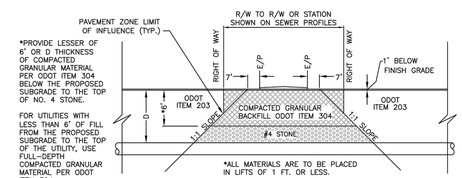

SANITARY SEWER OR FORCE MAIN CROSSING THE ROAD

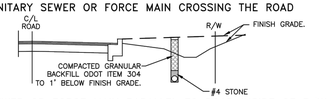

SANITARY SEWER OR FORCE MAIN PARALLEL TO ROAD INSIDE OF R/W

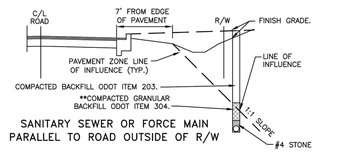

SANITARY SEWER OR FORCE MAIN PARALLEL TO ROAD OUTSIDE OF R/W

** FOR CUT SITUATIONS OUTSIDE OF THE R/W, NATIVE SOILS MAY BE USED FOR BACKFILL AS LONG AS 95% COMPACTION IS MET. TESTING IS REQUIRED FOR THE LAST 5 FEET OF FILL BEING PLACED AND MAY BE REQUIRED FOR ALL TRENCH BACKFILL AT THE DISCRETION OF THE SANITARY ENGINEER.

TYPICAL BACKFILL (PUBLIC OR PRIVATE ROADS)	APPROVED: / DATE: / REVISION:	STANDARD CONSTRUCTION DRAWING	
	DRAWING NO. Sa.S–2	SHEET NO. 1 of 2	

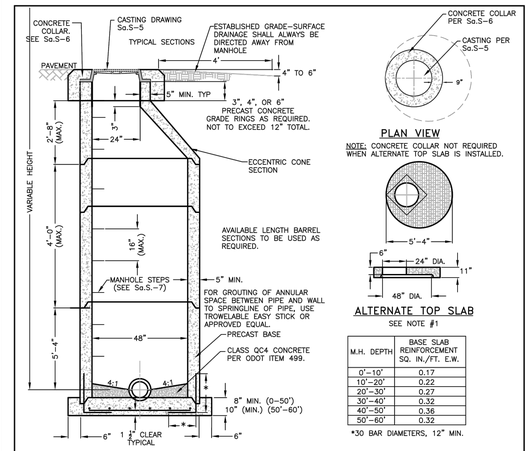

M.H. DEPTH	BASE SLAB REINFORCEMENT SQ. IN./FT. E.W.
0'–10'	0.17
10'–20'	0.22
20'–30'	0.27
30'–40'	0.32
40'–50'	0.36
50'–60'	0.32

*30 BAR DIAMETERS, 12" MIN.

NOTES:
1. WHEN SHOWN IN TRAFFIC AREAS, THE ALTERNATE TOP SLAB SHALL BE DESIGNED FOR TRAFFIC LOADING.
2. ALL CONSTRUCTION AND MATERIALS SHALL CONFORM TO ASTM C478 UNLESS OTHERWISE SHOWN.
3. ALL CORE DRILLED OPENINGS SHALL BE DONE ONLY AS APPROVED AND DIRECTED BY THE SANITARY ENGINEER.
4. PRECAST CONCRETE GRADE RINGS, SEALED WITH CONSEAL, SHALL BE USED IF NEEDED BETWEEN THE SLAB OR CONE TOP AND THE ACCESS FRAME CASTING AND COVER. NO MANHOLE BRICK SHALL BE PERMITTED FOR USE.
5. SEWER PIPE SHALL BE SECURED THROUGH THE MANHOLE WALL BY KOR–N–SEAL BOOT, PRESS WEDGE 2 GASKET OR APPROVED EQUIVALENT MEETING ASTM C923. CONNECTORS MADE BY A–LOK ARE NOT APPROVED EQUALS.
6. MANHOLE SECTIONS SHALL BE ASSEMBLED WITH CONSEAL, OR APPROVED EQUAL, AT ALL SECTION JOINTS IN ADDITION TO THE SEALED O–RING JOINT.
7. SANITARY ENGINEER MAY REQUEST A TYPE B OR TYPE C MANHOLE TO PROVIDE PROPER ACCESS.
8. IF WELDED WIRE FABRIC IS USED IN LIEU OF METAL BAR FOR REINFORCEMENT, AREA OF STEEL MAY BE REDUCE BY 1/3.

PRECAST CONCRETE MANHOLE, TYPE A (24" PIPE AND SMALLER)	APPROVED: / DATE: / REVISION:	STANDARD CONSTRUCTION DRAWING	
	DRAWING NO. Sa.S–3	SHEET NO. 1 of 3	

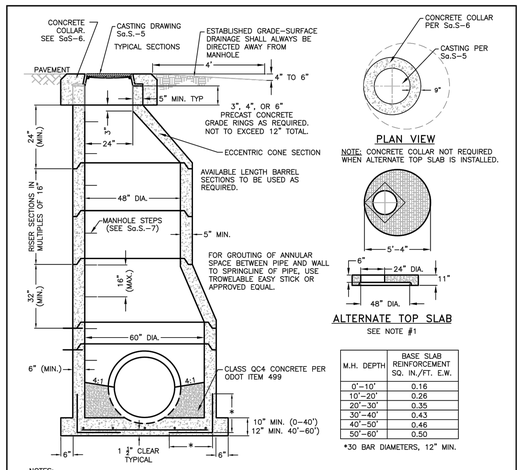

M.H. DEPTH	BASE SLAB REINFORCEMENT SQ. IN./FT. E.W.
0'–10'	0.16
10'–20'	0.26
20'–30'	0.35
30'–40'	0.43
40'–50'	0.46
50'–60'	0.50

*30 BAR DIAMETERS, 12" MIN.

NOTES:
1. WHEN SHOWN IN TRAFFIC AREAS, THE ALTERNATE TOP SLAB SHALL BE DESIGNED FOR TRAFFIC LOADING.
2. ALL CONSTRUCTION AND MATERIALS SHALL CONFORM TO ASTM C478–70 UNLESS OTHERWISE SHOWN.
3. ALL CORE DRILLED OPENINGS SHALL BE DONE ONLY AS APPROVED AND DIRECTED BY THE SANITARY ENGINEER.
4. PRECAST CONCRETE GRADE RINGS, SEALED WITH CONSEAL, SHALL BE USED IF NEEDED BETWEEN THE SLAB OR CONE TOP AND THE ACCESS FRAME CASTING AND COVER. NO MANHOLE BRICK SHALL BE PERMITTED FOR USE.
5. SEWER PIPE SHALL BE SECURED THROUGH THE MANHOLE WALL BY KOR–N–SEAL BOOT, PRESS WEDGE 2 GASKET OR APPROVED EQUIVALENT MEETING ASTM C923. CONNECTORS MADE BY A–LOK ARE NOT APPROVED EQUALS.
6. MANHOLE SECTIONS SHALL BE ASSEMBLED WITH CONSEAL, OR APPROVED EQUAL, AT ALL SECTION JOINTS IN ADDITION TO THE SEALED O–RING JOINT.
7. SANITARY ENGINEER MAY REQUEST A TYPE A OR TYPE C MANHOLE TO PROVIDE PROPER ACCESS.
8. IF WELDED WIRE FABRIC IS USED IN LIEU OF METAL BAR FOR REINFORCEMENT, AREA OF STEEL MAY BE REDUCED BY 1/3.

PRECAST CONCRETE MANHOLE, TYPE B (27"–42" PIPE)	APPROVED: / DATE: / REVISION:	STANDARD CONSTRUCTION DRAWING	
	DRAWING NO. Sa.S–3	SHEET NO. 2 of 3	

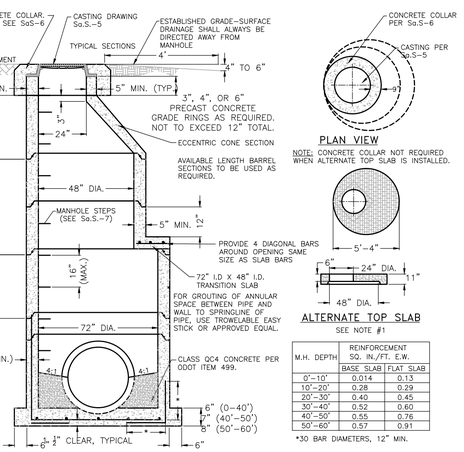

M.H. DEPTH	REINFORCEMENT SQ. IN./FT. E.W.	
	BASE SLAB	FLAT SLAB
0'–10'	0.014	0.13
10'–20'	0.28	0.29
20'–30'	0.40	0.45
30'–40'	0.52	0.60
40'–50'	0.55	0.76
50'–60'	0.57	0.91

*30 BAR DIAMETERS, 12" MIN.

NOTES:
1. WHEN SHOWN IN TRAFFIC AREAS, THE ALTERNATE TOP SLAB SHALL BE DESIGNED FOR TRAFFIC LOADING.
2. ALL CONSTRUCTION AND MATERIALS SHALL CONFORM TO ASTM C478–70 UNLESS OTHERWISE SHOWN.
3. ALL CORE DRILLED OPENINGS SHALL BE DONE ONLY AS APPROVED AND DIRECTED BY THE SANITARY ENGINEER.
4. PRECAST CONCRETE GRADE RINGS, SEALED WITH CONSEAL, SHALL BE USED IF NEEDED BETWEEN THE SLAB OR CONE TOP AND THE ACCESS FRAME CASTING AND COVER. NO MANHOLE BRICK SHALL BE PERMITTED FOR USE.
5. SEWER PIPE SHALL BE SECURED THROUGH THE MANHOLE WALL BY KOR–N–SEAL BOOT, PRESS WEDGE 2 GASKET OR APPROVED EQUIVALENT MEETING ASTM C923. CONNECTORS MADE BY A–LOK ARE NOT APPROVED EQUALS.
6. MANHOLE SECTIONS SHALL BE ASSEMBLED WITH CONSEAL, OR APPROVED EQUAL, AT ALL SECTION JOINTS IN ADDITION TO THE SEALED O–RING JOINT.
7. SANITARY ENGINEER MAY REQUEST A TYPE A OR TYPE C MANHOLE TO PROVIDE PROPER ACCESS.
8. IF WELDED WIRE FABRIC IS USED IN LIEU OF METAL BAR FOR REINFORCEMENT, AREA OF STEEL MAY BE REDUCED BY 1/3.

PRECAST CONCRETE MANHOLE, TYPE C (PIPE LARGER THAN 42")	APPROVED: / DATE: / REVISION:	STANDARD CONSTRUCTION DRAWING	
	DRAWING NO. Sa.S–3	SHEET NO. 3 of 3	

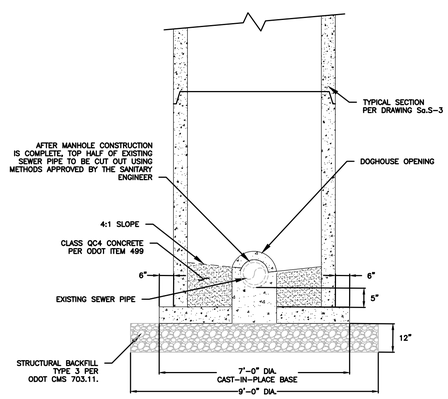

NOTES:
1. NEW SEWER PIPE SHALL BE SECURED THROUGH THE MANHOLE WALL BY "KOR–N–SEAL" BOOT, "PRESS WEDGE II" GASKET, OR AN APPROVED EQUIVALENT, MEETING ASTM C923.
2. ALL CONSTRUCTION AND MATERIAL SHALL CONFORM TO ASTM C478 UNLESS OTHERWISE SHOWN.
3. ALL FIELD CUT OPENINGS SHALL BE DONE ONLY AS DIRECTED BY THE SANITARY ENGINEER.
4. REFER TO DRAWING Sa.S–3 FOR MANHOLE CONSTRUCTION ABOVE DOGHOUSE STRUCTURE.
5. DOGHOUSE OPENING FOR EXISTING SEWER PIPE SHALL BE OUTSIDE DIAMETER OF THE PIPE PLUS 6 INCHES.
6. ANNULAR AREA BETWEEN DOGHOUSE OPENING AND EXISTING PIPE SHALL BE FILLED WITH MORTAR MEETING THE REQUIREMENTS OF ODOT CMS ITEM 705.22.
7. BASE SHALL BE CAST–IN–PLACE CONCRETE MEETING ODOT CMS 499 FOR CLASS QC4 CONCRETE.
8. CORROSION PROTECTION SHALL BE REQUIRED WHEN RECEIVING PUMP STATION FLOWS OR AS DIRECTED BY THE SANITARY ENGINEER.
9. DOGHOUSE MANHOLES ARE NOT ALLOWED ON PVC PIPE. IN THIS CASE, PIPE MUST BE CUT AND A NEW MANHOLE INSTALLED PER Sa.S–3.

1 - PRECAST CONCRETE MANHOLE, DOGHOUSE DETAIL
NOT TO SCALE

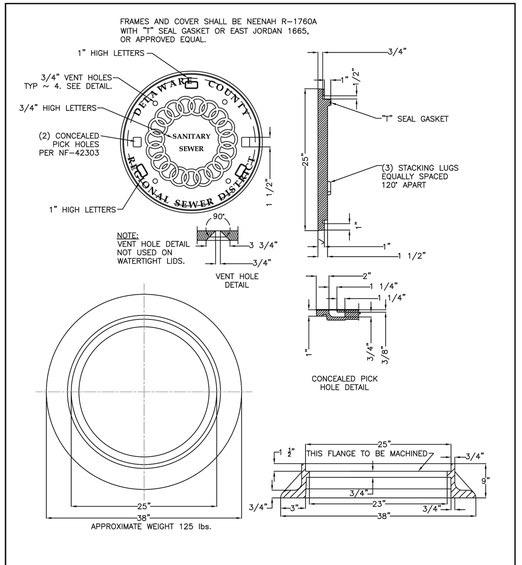

MANHOLE FRAME AND COVER CASTING	APPROVED: / DATE: / REVISION:	STANDARD CONSTRUCTION DRAWING	
	DRAWING NO. Sa.S–5	SHEET NO. 1 of 1	

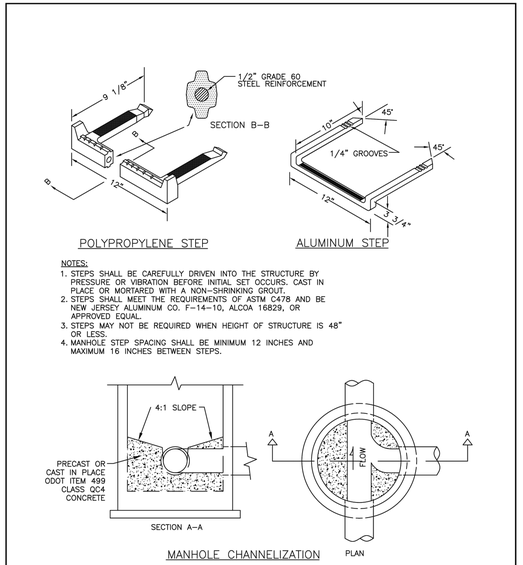

NOTES:
1. STEPS SHALL BE CAREFULLY DRIVEN INTO THE STRUCTURE BY PRESSURE OR VIBRATION BEFORE INITIAL SET OCCURS. CAST IN PLACE OR MORTARED WITH A NON–SHRINKING GROUT.
2. STEPS SHALL MEET THE REQUIREMENTS OF ASTM C478 AND BE NEW JERSEY ALUMINUM CO. F–14–10, ALCOA 16829, OR APPROVED EQUAL.
3. STEPS MAY NOT BE REQUIRED WHEN HEIGHT OF STRUCTURE IS 48" OR LESS.
4. MANHOLE STEP SPACING SHALL BE MINIMUM 12 INCHES AND MAXIMUM 16 INCHES BETWEEN STEPS.

MANHOLE STEPS AND CHANNEL	APPROVED: / DATE: / REVISION:	STANDARD CONSTRUCTION DRAWING	
	DRAWING NO. Sa.S–7	SHEET NO. 1 of 1	

HDR

ISSUE	DATE	DESCRIPTION
	02-07-2024	AS-BUILT

PROJECT MANAGER	KYLE SCHWIETERMAN
DESIGN BY	LCT
DRAWN BY	VKN
APPROVED BY	
PROJECT NUMBER	10062733

DELAWARE COUNTY REGIONAL SEWER DISTRICT
50 CHANNING STREET, DELAWARE, OHIO 43015

PEACHBLOW PUMP STATION AND FORCEMAIN UPGRADE PROJECT

FORCEMAIN AND GRAVITY SEWER

GENERAL

STANDARD DETAILS

0 30' 60'
SCALE: 1"=30'

FILENAME G-04_G-07.DWG
SCALE NOT TO SCALE

SHEET G-04

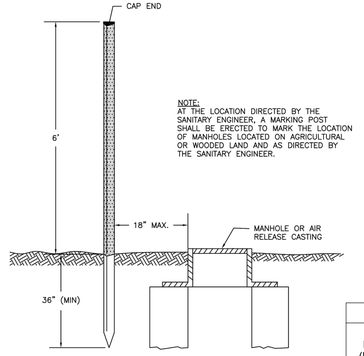

NOTE:
AT THE LOCATION DIRECTED BY THE SANITARY ENGINEER, A MARKING POST SHALL BE ERECTED TO MARK THE LOCATION OF MANHOLES LOCATED ON AGRICULTURAL OR WOODED LAND AND AS DIRECTED BY THE SANITARY ENGINEER.

EXTERIOR DESIGN: THE MARKER POST MUST BE GREEN IN COLOR AND TRIANGULAR IN SHAPE WITH EACH SIDE AT LEAST 3" WIDE. A 2⅛" WIDE DECAL SHALL FIT ON EACH SIDE OF THE MARKER. DECALS SHALL BE PLACED ON ALL THREE FLAT SIDES TO ENSURE THAT A WARNING MESSAGE CAN BE SEEN FROM ANY DIRECTION.
FLEXIBLE STYLE: THE MARKER SHALL BE FLEXIBLE AND REBOUND IF HIT BY AN AUTOMOBILE. THE MARKER SHALL WITHSTAND A MINIMUM OF FIVE VEHICLE IMPACTS AT 45MPH.
WEATHERING STABILITY: THE MARKING POST SHALL NOT SIGNIFICANTLY FADE OR BECOME BRITTLE WHEN EXPOSED TO ULTRAVIOLET LIGHT FOR A MINIMUM OF TEN YEARS. THE MARKING POST SHALL BE TEMPERATURE STABLE FROM −40° TO +150°.
SOIL ANCHOR: SOIL ANCHORS SHALL BE GALVANIZED STEEL, 13" LONG (MIN.) AND HAVE PUNCH TABS WHICH LOCK INTO THE TRIANGULAR POST WHEN INSERTED IN THE ANCHOR. ANCHORS ARE TO BE INSTALLED FLUSH WITH THE GROUND SURFACE.
ACCEPTABLE MANUFACTURERS: RHINO TRIVIEW™ WITH SOIL ANCHOR OR APPROVED EQUAL.
DECAL: DETAILS SHALL BE APPROVED BY THE SANITARY ENGINEER PRIOR TO INSTALLATION.

RECORD DOCUMENT

THE ORIGINAL CONTRACT DOCUMENTS, PREPARED BY HDR (ENGINEER), HAVE BEEN MODIFIED TO INCORPORATE FIELD CHANGES MADE BY THE CONTRACTOR BASED ON AS-BUILT REDLINES PROVIDED BY THE CONTRACTOR AND OTHER DATA ASSOCIATED WITH CHANGES IN THE WORK AUTHORIZED BY THE CLIENT. THE ENGINEER REPRESENTS THAT THESE RECORD DRAWINGS HAVE BEEN PREPARED ON THE BASIS OF THIS INFORMATION PROVIDED TO THE ENGINEER, BUT MAKES NO REPRESENTATIONS AS TO THE ACCURACY OR COMPLETENESS OF SUCH INFORMATION.

TYPICAL MANHOLE/AIR RELEASE MARKING	APPROVED: / DATE: / REVISION:	STANDARD CONSTRUCTION DRAWING	
	DRAWING NO. Sa.S−9	SHEET NO. 1 of 1	

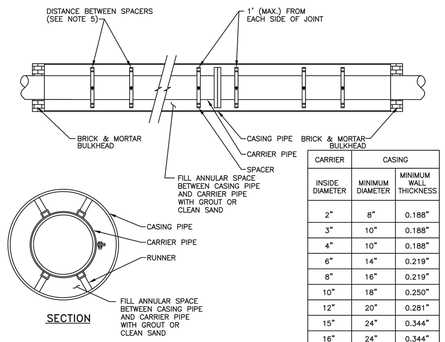

SECTION

CARRIER	CASING	
INSIDE DIAMETER	MINIMUM DIAMETER	MINIMUM WALL THICKNESS
2"	8"	0.188"
3"	10"	0.188"
4"	10"	0.188"
6"	14"	0.219"
8"	16"	0.219"
10"	18"	0.250"
12"	20"	0.281"
15"	24"	0.344"
16"	24"	0.344"
18"	28"	0.406"
20"	28"	0.406"
24"	36"	0.469"
27"	42"	0.500"
30"	42"	0.500"
36"	48"	0.675"

NOTES:
1. CASING PIPE SHALL BE INSTALLED BY JACKING, WITH A MINIMUM WALL THICKNESS AS SHOWN IN THE TABLE.
2. CASING SPACERS SHALL BE ADVANCE PRODUCTS & SYSTEMS, INC., SSI SERIES, OR APPROVED EQUIVALENT. CASING SPACERS MUST BE FULL PIPE FOR A TIGHT FIT BETWEEN CARRIER AND CASING PIPE.
3. WHEN DUCTILE IRON PIPE IS USED, THE JOINTS SHALL BE RESTRAINED WITH FIELDLOK GASKETS OR APPROVED EQUIVALENT.
4. WHEN PVC PIPE IS USED, THE JOINTS SHALL BE RESTRAINED WITH JCM SUR−GRIP RESTRAINERS OR APPROVED EQUIVALENT.
5. DIMENSIONS BETWEEN SPACERS FOR PVC PIPE SHALL BE 6 FEET MAXIMUM. DIMENSIONS BETWEEN SPACERS FOR DUCTILE IRON PIPE SHALL BE 8 FEET MAXIMUM.
6. FILL ANNULAR SPACE WITH GROUT MEETING THE REQUIREMENTS OF ODOT ITEM 613 OR CLEAN SAND MEETING THE REQUIREMENTS OF ODOT ITEM 703.03.
7. THE QUANTITY OF RUNNERS IS IN ACCORDANCE WITH THE SIZE OF THE CARRIER PIPE AS FOLLOWS:
   TO 14" DIA. – 4 RUNNERS
   16" TO 36" DIA. – 6 RUNNERS
   38" TO 48" DIA. – 8 RUNNERS

CASING PIPE	APPROVED: / DATE: / REVISION:	STANDARD CONSTRUCTION DRAWING	
	DRAWING NO. Sa.S−17	SHEET NO. 1 of 1	

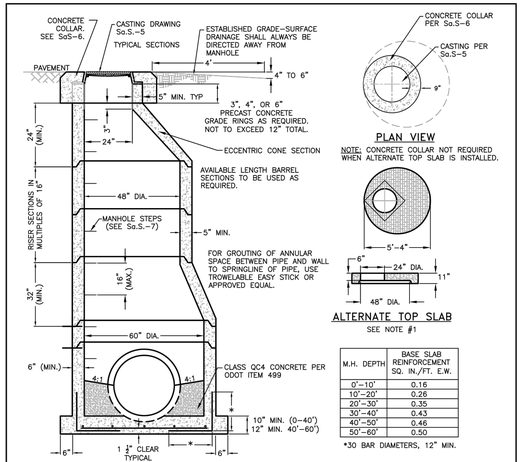

M.H. DEPTH	BASE SLAB REINFORCEMENT SQ. IN./FT. E.W.
0'−10'	0.16
10'−20'	0.26
20'−30'	0.35
30'−40'	0.43
40'−50'	0.46
50'−60'	0.50

*30 BAR DIAMETERS, 12" MIN.

NOTES:
1. WHEN SHOWN IN TRAFFIC AREAS, THE ALTERNATE TOP SLAB SHALL BE DESIGNED FOR TRAFFIC LOADING.
2. ALL CONSTRUCTION AND MATERIALS SHALL CONFORM TO ASTM C478−70 UNLESS OTHERWISE SHOWN.
3. ALL CORE DRILLED OPENINGS SHALL BE DONE ONLY AS APPROVED AND DIRECTED BY THE SANITARY ENGINEER.
4. PRECAST CONCRETE GRADE RINGS, SEALED WITH CONSEAL, SHALL BE USED IF NEEDED BETWEEN THE SLAB OR CONE TOP AND THE ACCESS FRAME CASTING AND COVER. NO MANHOLE BRICK SHALL BE PERMITTED FOR USE.
5. SEWER PIPE SHALL BE SECURED THROUGH THE MANHOLE WALL BY KOR−N−SEAL BOOT. PRESS WEDGE 2 GASKET OR APPROVED EQUIVALENT MEETING ASTM C923. CONNECTORS MADE BY A−LOK ARE NOT APPROVED EQUALS.
6. MANHOLE SECTIONS SHALL BE ASSEMBLED WITH CONSEAL, OR APPROVED EQUAL, AT ALL SECTION JOINTS IN ADDITION TO THE SEALED O−RING JOINT.
7. SANITARY ENGINEER MAY REQUEST A TYPE A OR TYPE C MANHOLE TO PROVIDE PROPER ACCESS.
8. IF WELDED WIRE FABRIC IS USED IN LIEU OF METAL BAR FOR REINFORCEMENT, AREA OF STEEL MAY BE REDUCED BY 1/3.

PRECAST CONCRETE MANHOLE, TYPE B (27"−42" PIPE)	APPROVED: / DATE: / REVISION:	STANDARD CONSTRUCTION DRAWING	
	DRAWING NO. Sa.S−3	SHEET NO. 2 of 3	

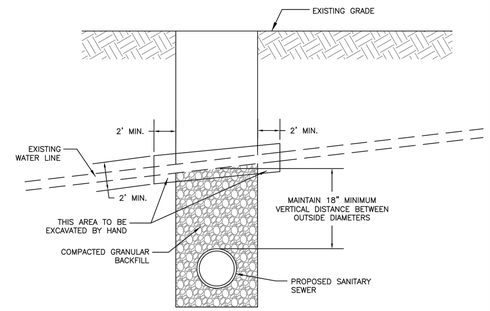

NOTE:
1. CONTRACTOR SHALL PROTECT EXISTING UTILITIES DURING EXCAVATION.
2. IF 18" VERTICAL CLEARANCE IS NOT MET, THEN CASING PIPE IS REQUIRED ON THE WATERLINE PER Sa.S−17.
3. CONTRACTOR SHALL HAND DIG AROUND WATERLINE.

WATERLINE CROSSING	APPROVED: / DATE: / REVISION:	STANDARD CONSTRUCTION DRAWING	
	DRAWING NO. Sa.S−20	SHEET NO. 1 of 1	

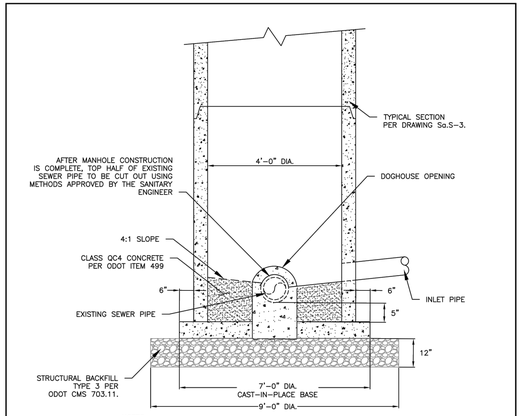

NOTES:
1. DOGHOUSE MANHOLES MAY BE USED ON CONCRETE SEWER PIPE ONLY.
2. NEW SEWER PIPE SHALL BE SECURED THROUGH THE MANHOLE WALL BY "KOR−N−SEAL" BOOT. "PRESS WEDGE II" GASKET, OR AN APPROVED EQUIVALENT, MEETING ASTM C923.
3. ALL CONSTRUCTION AND MATERIAL SHALL CONFORM TO ASTM C478 UNLESS OTHERWISE SHOWN.
4. ALL FIELD CUT OPENINGS SHALL BE DONE ONLY AS DIRECTED BY THE SANITARY ENGINEER.
5. REFER TO DRAWING Sa.S−3 FOR MANHOLE CONSTRUCTION ABOVE DOGHOUSE STRUCTURE.
6. DOGHOUSE OPENING FOR EXISTING SEWER PIPE SHALL BE OUTSIDE DIAMETER OF THE PIPE PLUS 6 INCHES.
7. ANNULAR AREA BETWEEN DOGHOUSE OPENING AND EXISTING PIPE SHALL BE FILLED WITH MORTAR MEETING THE REQUIREMENTS OF ODOT CMS ITEM 705.22.
8. BASE SHALL BE CAST−IN−PLACE CONCRETE MEETING ODOT CMS 499 FOR CLASS QC4 CONCRETE.
9. CORROSION PROTECTION SHALL BE REQUIRED WHEN RECEIVING PUMP STATION FLOWS OR AS DIRECTED BY THE SANITARY ENGINEER.
10. DOGHOUSE MANHOLES ARE NOT ALLOWED ON PVC PIPE. IN THIS CASE, PIPE MUST BE CUT AND A NEW MANHOLE INSTALLED PER Sa.S−3.

PRECAST CONCRETE MANHOLE, DOGHOUSE	APPROVED: / DATE: / REVISION:	STANDARD CONSTRUCTION DRAWING	
	DRAWING NO. Sa.S−4	SHEET NO. 1 of 1	

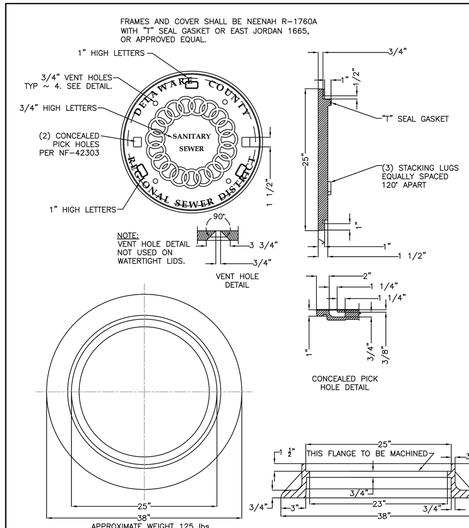

MANHOLE FRAME AND COVER CASTING	APPROVED: / DATE: / REVISION:	STANDARD CONSTRUCTION DRAWING	
	DRAWING NO. Sa.S−5	SHEET NO. 1 of 1	

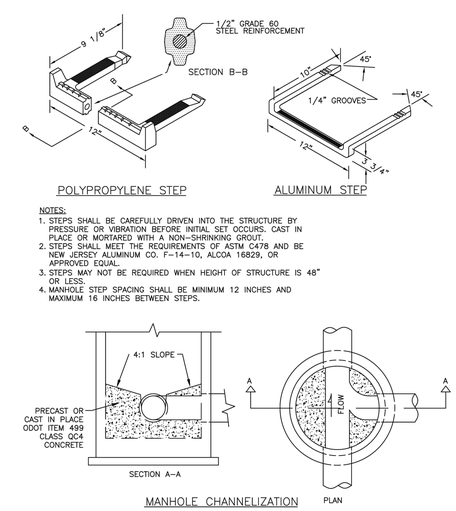

NOTES:
1. STEPS SHALL BE CAREFULLY DRIVEN INTO THE STRUCTURE BY PRESSURE OR VIBRATION BEFORE INITIAL SET OCCURS. CAST IN PLACE OR MORTARED WITH A NON−SHRINKING GROUT.
2. STEPS SHALL MEET THE REQUIREMENTS OF ASTM C478 AND BE NEW JERSEY ALUMINUM CO. F−14−10, ALCOA 16829, OR APPROVED EQUAL.
3. STEPS MAY NOT BE REQUIRED WHEN HEIGHT OF STRUCTURE IS 48" OR LESS.
4. MANHOLE STEP SPACING SHALL BE MINIMUM 12 INCHES AND MAXIMUM 16 INCHES BETWEEN STEPS.

MANHOLE STEPS AND CHANNEL	APPROVED: / DATE: / REVISION:	STANDARD CONSTRUCTION DRAWING	
	DRAWING NO. Sa.S−7	SHEET NO. 1 of 1	

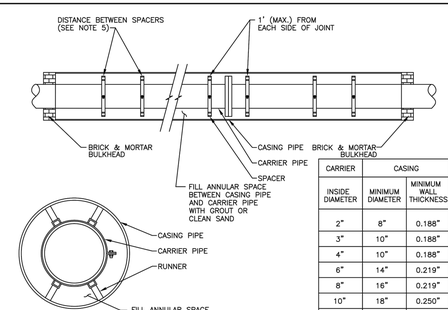

SECTION

CARRIER	CASING	
INSIDE DIAMETER	MINIMUM DIAMETER	MINIMUM WALL THICKNESS
2"	8"	0.188"
3"	10"	0.188"
4"	10"	0.188"
6"	14"	0.219"
8"	16"	0.219"
10"	18"	0.250"
12"	20"	0.281"
15"	24"	0.344"
16"	24"	0.344"
18"	28"	0.406"
20"	28"	0.406"
24"	36"	0.469"
27"	42"	0.500"
30"	42"	0.500"
36"	48"	0.675"

NOTES:
1. CASING PIPE SHALL BE INSTALLED BY JACKING, WITH A MINIMUM WALL THICKNESS AS SHOWN IN THE TABLE.
2. CASING SPACERS SHALL BE ADVANCE PRODUCTS & SYSTEMS, INC., SSI SERIES, OR APPROVED EQUIVALENT. CASING SPACERS MUST BE FULL PIPE FOR A TIGHT FIT BETWEEN CARRIER AND CASING PIPE.
3. WHEN DUCTILE IRON PIPE IS USED, THE JOINTS SHALL BE RESTRAINED WITH FIELDLOK GASKETS OR APPROVED EQUIVALENT.
4. WHEN PVC PIPE IS USED, THE JOINTS SHALL BE RESTRAINED WITH JCM SUR−GRIP RESTRAINERS OR APPROVED EQUIVALENT.
5. DIMENSIONS BETWEEN SPACERS FOR PVC PIPE SHALL BE 6 FEET MAXIMUM. DIMENSIONS BETWEEN SPACERS FOR DUCTILE IRON PIPE SHALL BE 8 FEET MAXIMUM.
6. FILL ANNULAR SPACE WITH GROUT MEETING THE REQUIREMENTS OF ODOT ITEM 613 OR CLEAN SAND MEETING THE REQUIREMENTS OF ODOT ITEM 703.03.
7. THE QUANTITY OF RUNNERS IS IN ACCORDANCE WITH THE SIZE OF THE CARRIER PIPE AS FOLLOWS:
   TO 14" DIA. – 4 RUNNERS
   16" TO 36" DIA. – 6 RUNNERS
   38" TO 48" DIA. – 8 RUNNERS

CASING PIPE	APPROVED: / DATE: / REVISION:	STANDARD CONSTRUCTION DRAWING	
	DRAWING NO. Sa.S−17	SHEET NO. 1 of 1	

HDR

ISSUE	DATE	DESCRIPTION
	02-07-2024	AS-BUILT

PROJECT MANAGER	KYLE SCHWIETERMAN
DESIGN BY	LCT
DRAWN BY	VKN
APPROVED BY	
PROJECT NUMBER	10062733

DELAWARE COUNTY REGIONAL SEWER DISTRICT
50 CHANNING STREET, DELAWARE, OHIO 43015

PEACHBLOW PUMP STATION AND FORCEMAIN UPGRADE PROJECT

FORCEMAIN AND GRAVITY SEWER

GENERAL

STANDARD DETAILS

0 30' 60'
SCALE: 1"=30'

FILENAME G-04_G-07.DWG
SCALE NOT TO SCALE

SHEET G-05

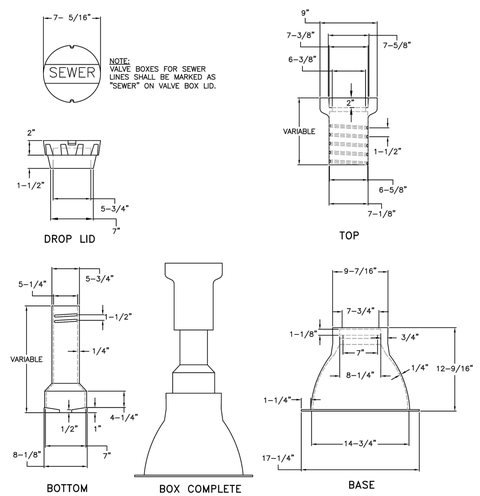

NOTE:
STANDARD VALVE BOX SHALL BE USED FOR INSTALLATIONS WHERE TRACER WIRE IS BROUGHT TO THE GROUND SURFACE FOR FORCE MAIN LOCATING.

DELAWARE COUNTY Ohio	STANDARD VALVE BOX	APPROVED: / DATE: / REVISION:	STANDARD CONSTRUCTION DRAWING
		DRAWING NO. Sa.S-27	SHEET NO. 1 of 1

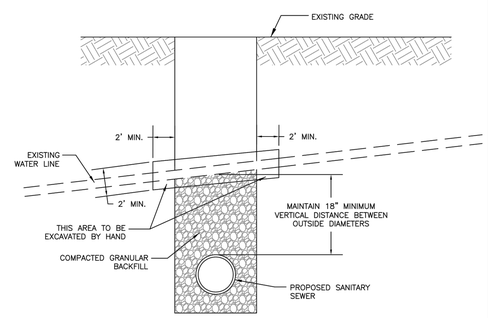

NOTE:
1. CONTRACTOR SHALL PROTECT EXISTING UTILITIES DURING EXCAVATION.
2. IF 18" VERTICAL CLEARANCE IS NOT MET, THEN CASING PIPE IS REQUIRED ON THE WATERLINE PER Sa.S-17.
3. CONTRACTOR SHALL HAND DIG AROUND WATERLINE.

DELAWARE COUNTY Ohio	WATERLINE CROSSING	APPROVED: / DATE: / REVISION:	STANDARD CONSTRUCTION DRAWING
		DRAWING NO. Sa.S-20	SHEET NO. 1 of 1

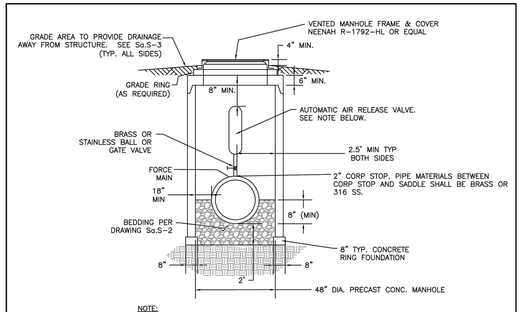

NOTE:
THE AIR RELEASE VALVE SHALL BE AN AUTOMATIC SEWAGE AIR VALVE WITH A 2" INLET & BACK FLUSHING ACCESSORIES. VALVE AND ASSEMBLY SHALL BE VENT-O-MAT MODEL #050RGX1021.

DELAWARE COUNTY Ohio	TYPICAL AUTOMATIC AIR RELEASE VALVE	APPROVED: / DATE: / REVISION:	STANDARD CONSTRUCTION DRAWING
		DRAWING NO. Sa.S-21	SHEET NO. 1 of 1

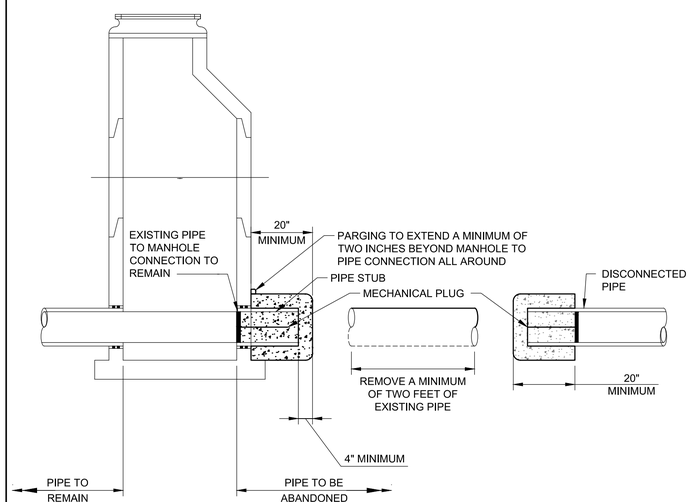

1 - FORCEMAIN ABANDONMENT AT EXISTING MANHOLE
NOT TO SCALE

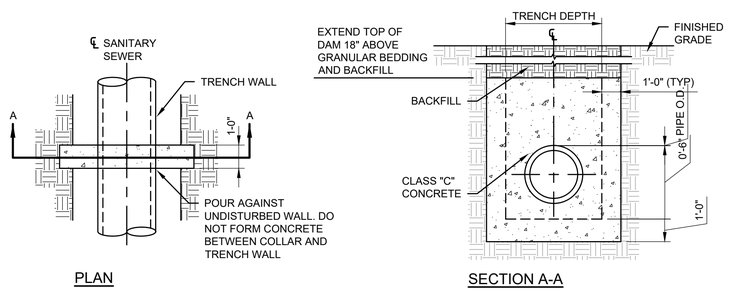

2 - TRENCH DAM DETAIL
NOT TO SCALE

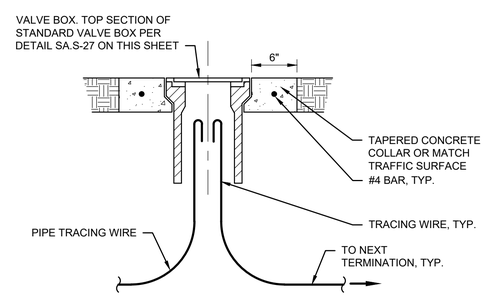

3 - TRACER WIRE BOX
NOT TO SCALE

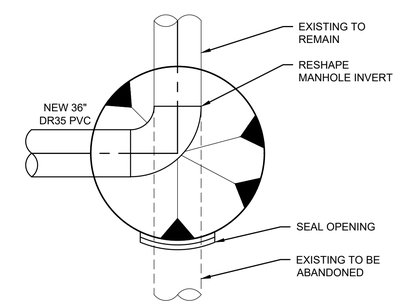

4 - DOGHOUSE MANHOLE CHANNEL DETAIL
NOT TO SCALE

RECORD DOCUMENT

THE ORIGINAL CONTRACT DOCUMENTS, PREPARED BY HDR (ENGINEER), HAVE BEEN MODIFIED TO INCORPORATE FIELD CHANGES MADE BY THE CONTRACTOR BASED ON AS-BUILT REDLINES PROVIDED BY THE CONTRACTOR AND OTHER DATA ASSOCIATED WITH CHANGES IN THE WORK AUTHORIZED BY THE CLIENT. THE ENGINEER REPRESENTS THAT THESE RECORD DRAWINGS HAVE BEEN PREPARED ON THE BASIS OF THIS INFORMATION PROVIDED TO THE ENGINEER, BUT MAKES NO REPRESENTATIONS AS TO THE ACCURACY OR COMPLETENESS OF SUCH INFORMATION.

ISSUE	DATE	DESCRIPTION
	02-07-2024	AS-BUILT

PROJECT MANAGER	KYLE SCHWIETERMAN
DESIGN BY	LCT
DRAWN BY	VKN
APPROVED BY	
PROJECT NUMBER	10062733

DELAWARE COUNTY REGIONAL SEWER DISTRICT
50 CHANNING STREET, DELAWARE, OHIO 43015

PEACHBLOW PUMP STATION AND FORCEMAIN UPGRADE PROJECT

FORCEMAIN AND GRAVITY SEWER

GENERAL CIVIL STANDARD DETAILS

0 30' 60'
SCALE: 1"=30'

FILENAME G-04_G-07.DWG
SCALE NOT TO SCALE

SHEET G-06

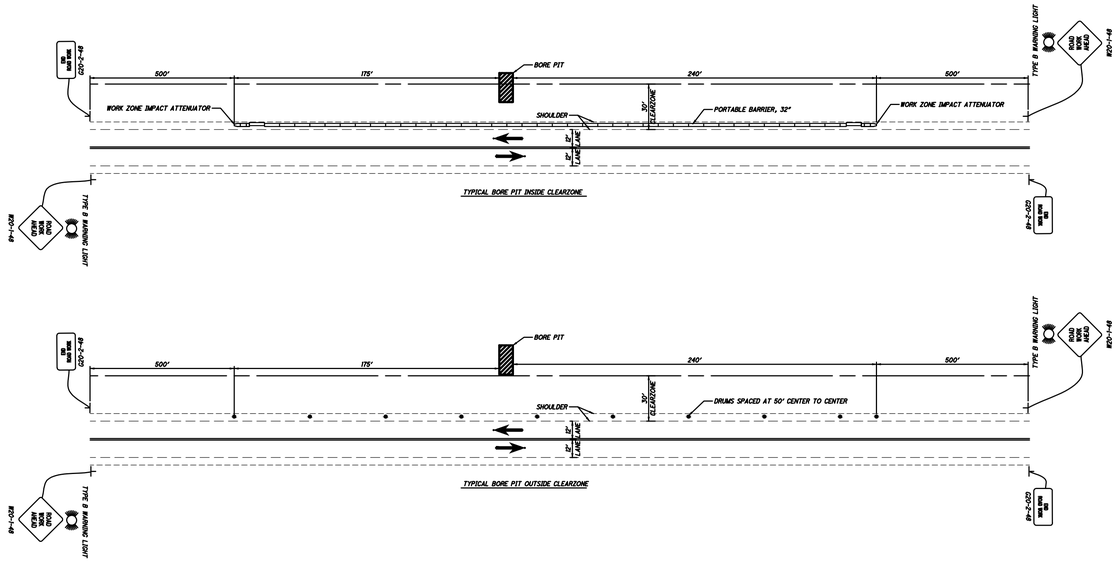

1 - BORE PIT PROTECTION DETAIL

NOT TO SCALE

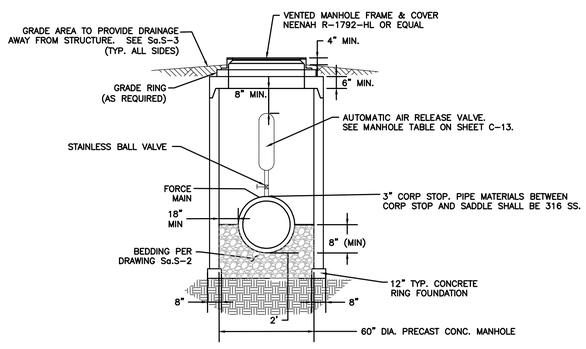

2 - TYPICAL AUTOMATIC AIR RELEASE VALVE DETAIL

NOT TO SCALE

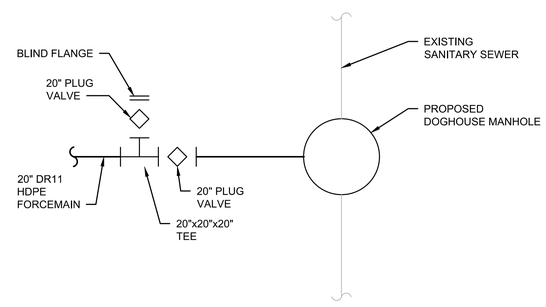

3 - PLUG VALVE TEE CONNECTION SCHEMATIC

NOT TO SCALE

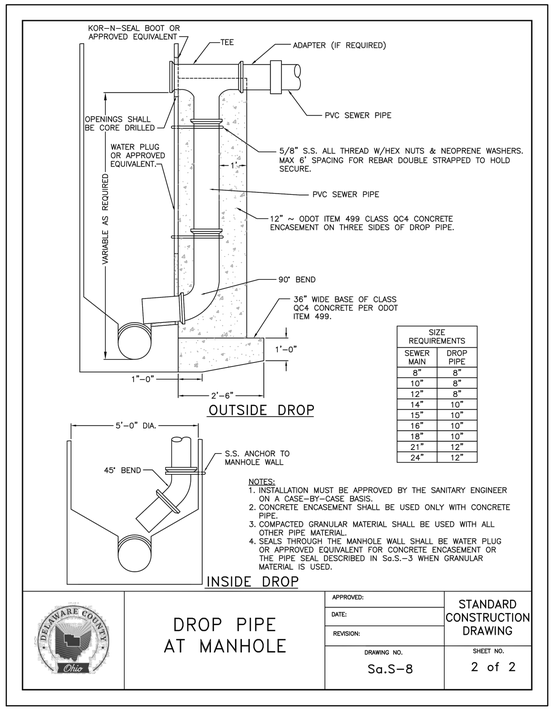

SIZE REQUIREMENTS	
SEWER MAIN	DROP PIPE
8"	8"
10"	8"
12"	8"
14"	10"
15"	10"
16"	10"
18"	10"
21"	12"
24"	12"

NOTES:
1. INSTALLATION MUST BE APPROVED BY THE SANITARY ENGINEER ON A CASE-BY-CASE BASIS.
2. CONCRETE ENCASEMENT SHALL BE USED ONLY WITH CONCRETE PIPE.
3. COMPACTED GRANULAR MATERIAL SHALL BE USED WITH ALL OTHER PIPE MATERIAL.
4. SEALS THROUGH THE MANHOLE WALL SHALL BE WATER PLUG OR APPROVED EQUIVALENT FOR CONCRETE ENCASEMENT OR THE PIPE SEAL DESCRIBED IN Sa.S.-3 WHEN GRANULAR MATERIAL IS USED.

DROP PIPE AT MANHOLE

APPROVED:
DATE:
REVISION:
DRAWING NO. Sa.S-8
SHEET NO. 2 of 2
STANDARD CONSTRUCTION DRAWING

RECORD DOCUMENT

THE ORIGINAL CONTRACT DOCUMENTS, PREPARED BY HDR (ENGINEER), HAVE BEEN MODIFIED TO INCORPORATE FIELD CHANGES MADE BY THE CONTRACTOR BASED ON AS-BUILT REDLINES PROVIDED BY THE CONTRACTOR AND OTHER DATA ASSOCIATED WITH CHANGES IN THE WORK AUTHORIZED BY THE CLIENT. THE ENGINEER REPRESENTS THAT THESE RECORD DRAWINGS HAVE BEEN PREPARED ON THE BASIS OF THIS INFORMATION PROVIDED TO THE ENGINEER, BUT MAKES NO REPRESENTATIONS AS TO THE ACCURACY OR COMPLETENESS OF SUCH INFORMATION.

ISSUE	DATE	DESCRIPTION
	02-07-2024	AS-BUILT

PROJECT MANAGER	KYLE SCHWIETERMAN
DESIGN BY	LCT
DRAWN BY	VKN
APPROVED BY	
PROJECT NUMBER	10062733

DELAWARE COUNTY REGIONAL SEWER DISTRICT
50 CHANNING STREET, DELAWARE, OHIO 43015

PEACHBLOW PUMP STATION AND FORCEMAIN UPGRADE PROJECT

FORCEMAIN AND GRAVITY SEWER

GENERAL CIVIL STANDARD DETAILS

0 30' 60'
SCALE: 1"=30'

FILENAME G-04_G-07.DWG
SCALE NOT TO SCALE

SHEET G-07

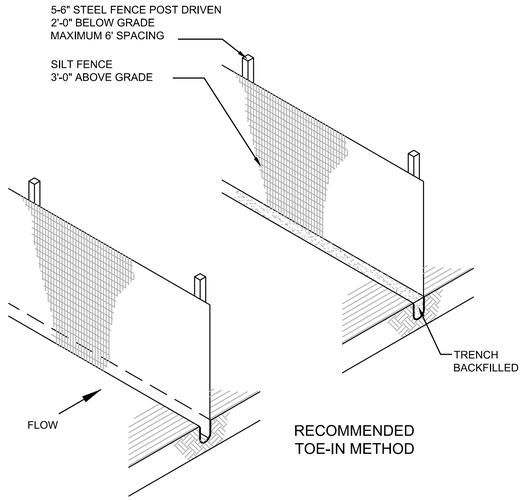

NOTES:

1. STEEL POSTS WHICH SUPPORT THE SILT FENCE SHALL BE INSTALLED ON A SLIGHT ANGLE TOWARD THE ANTICIPATED RUNOFF SOURCE.
2. SILT FENCE SHALL BE TRENCHED IN WITH A SPADE OR MECHANICAL TRENCHER SO THAT THE DOWNSLOPE FACE OF THE TRENCH IS FLAT AND PERPENDICULAR TO THE LINE OF FLOW.
3. THE TRENCH SHOULD BE A MINIMUM OF 6" DEEP AND 3"-4" WIDE TO ALLOW FOR THE SILT FENCE TO BE PLACED IN THE GROUND AND BACKFILLED.
4. SILT FENCE SHOULD BE SECURELY FASTENED TO EACH STEEL SUPPORT POST OR TO WOVEN WIRE WHICH IS IN TURN ATTACHED TO THE STEEL FENCE POSTS.
5. INSPECTION SHALL BE FREQUENT AND REPAIR OR REPLACEMENT SHALL BE MADE PROMPTLY AS NEEDED.
6. SILT FENCE SHALL BE REMOVED WHEN IT HAS SERVED ITS USEFULNESS SO AS NOT TO BLOCK OR IMPEDE STORM FLOW OR DRAINAGE.
7. SEDIMENT TRAPPED BY THIS PRACTICE SHALL BE UNIFORMLY DISTRIBUTED ON THE SOURCE AREA PRIOR TO TOPSOILING.

1 SILT FENCE TOE-IN DETAIL
NOT TO SCALE

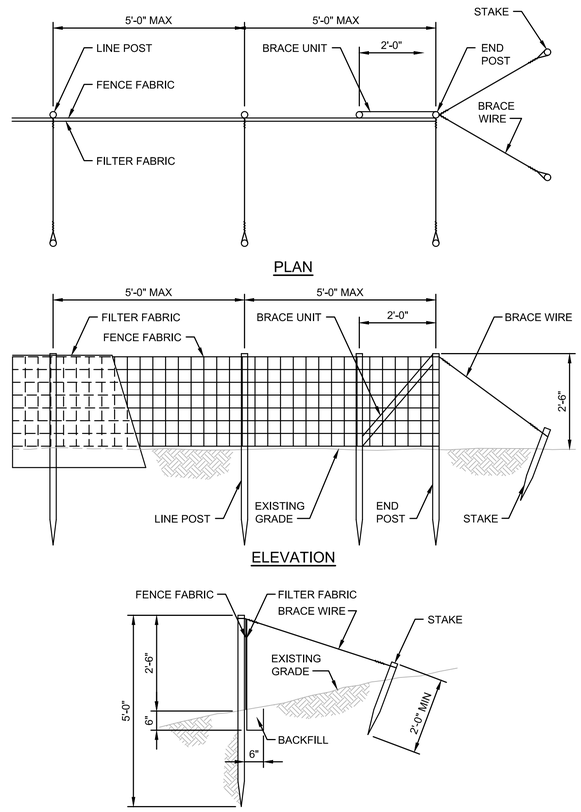

NOTE: SEE NOTES ON DETAIL 1 THIS SHEET.

SECTION

2 SILT FENCE WITH WOVEN WIRE DETAIL
NOT TO SCALE

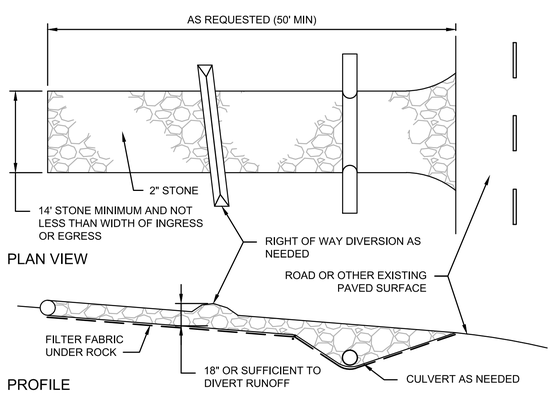

NOTES:

1. FILTER FABRIC - WILL BE PLACED OVER THE ENTIRE SUBGRADE PRIOR TO PLACING OF STONE.
2. SURFACE WATER - ALL SURFACE WATER FLOWING OR DIVERTED TOWARD CONSTRUCTION ENTRANCES SHALL BE PIPED ACROSS THE ENTRANCE.
3. MAINTENANCE - THE ENTRANCE SHALL BE MAINTAINED IN A CONDITION WHICH WILL PREVENT TRACKING OR FLOWING OF SEDIMENT ONTO PUBLIC RIGHT-OF-WAY. THIS MAY REQUIRE PERIODIC TOP DRESSING WITH ADDITIONAL STONE AS CONDITIONS DEMAND REPAIR AND/OR CLEANOUT OF ANY MEASURES USED TO TRAP SEDIMENT. ALL SEDIMENT SPILLED, DROPPED, WASHED, OR TRACKED ONTO PUBLIC RIGHTS-OF-WAY MUST BE REMOVED IMMEDIATELY.
4. WASHING - WHEELS SHALL BE CLEANED TO REMOVE MUD PRIOR TO ENTRANCE ONTO PUBLIC RIGHTS-OF-WAY. WHEN WASHING IS NEEDED, IT SHALL BE DONE ON AN AREA STABILIZED WITH STONE AND WHICH DRAINS INTO AN ON-SITE CONTAINMENT AREA.
5. PERIODIC INSPECTION AND REQUIRED MAINTENANCE SHALL BE PERFORMED AFTER EACH RAIN.
6. THE STABILIZED CONSTRUCTION ENTRANCE DESCRIBED IS A MINIMUM STAND OF INGRESS AND EGRESS FROM THE CONSTRUCTION SITE ONTO PUBLIC RIGHT-OF-WAY. THE CONTRACTOR MAY VARY THE CONSTRUCTION AS NEEDED FOR SPECIFIC SITE CONDITIONS PROVIDED THAT ITS FUNCTION SATISFIES THE INTENT DESCRIBED HEREIN AS DETERMINED BY THE SANITARY ENGINEER.

5 ROCK CONSTRUCTION ENTRANCE
NOT TO SCALE

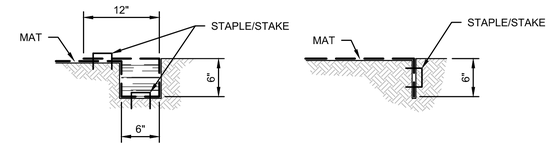

NOTES:

1. PREPARE SOIL BEFORE INSTALLING BLANKETS, INCLUDING APPLICATION OF FERTILIZER AND SEED.
2. BEGIN AT THE TOP OF THE SLOPE BY ANCHORING THE BLANKET IN A 6" DEEP x 6" WIDE TRENCH WITH APPROXIMATELY 12" OF BLANKET EXTENDED BEYOND THE UP-SLOPE PORTION OF THE TRENCH. ANCHOR THE BLANKET WITH A ROW OF STAPLES/STAKES APPROXIMATELY 12" APART IN THE BOTTOM OF THE TRENCH. BACKFILL AND COMPACT THE TRENCH AFTER STAPLING. APPLY SEED TO COMPACTED SOIL AND FOLD REMAINING 12" PORTION OF BLANKET BACK OVER SEED AND COMPACTED SOIL. SECURE BLANKET OVER COMPACTED SOIL WITH A ROW OF STAPLES/STAKES SPACED APPROXIMATELY 12" APART ACROSS THE WIDTH OF THE BLANKET.
3. ROLL THE BLANKETS DOWN OR HORIZONTALLY ACROSS THE SLOPE. BLANKETS WILL UNROLL WITH APPROPRIATE SIDE AGAINST THE SOIL SURFACE. ALL BLANKETS MUST BE SECURELY FASTENED BY PLACING STAPLES/STAKES IN APPROPRIATE LOCATIONS, SEE MANUFACTURER'S INSTALLATION INSTRUCTIONS.
4. THE EDGES OF PARALLEL BLANKETS MUST BE STAPLED WITH APPROXIMATELY 2"-5" OVERLAP DEPENDING ON BLANKET TYPE. TO ENSURE PROPER SEAM ALIGNMENT, PLACE THE EDGE OF THE OVERLAPPING BLANKET EVEN WITH THE COLORED SEAM STITCH ON THE PREVIOUSLY INSTALLED BLANKET.
5. CONSECUTIVE BLANKETS SPLICED DOWN THE SLOPE MUST BE PLACED END OVER END (SHINGLE STYLE) WITH AN APPROXIMATE 3" OVERLAP. STAPLE THROUGH OVERLAPPED AREA, APPROXIMATELY 12" APART ACROSS ENTIRE BLANKET WIDTH.
6. CONSULT MANUFACTURER FOR ADDITIONAL REQUIREMENTS.

3 EROSION CONTROL BLANKET INSTALLATION DETAILS
NOT TO SCALE

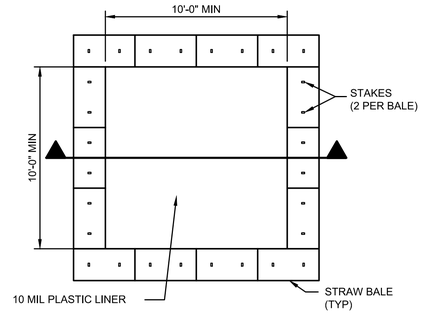

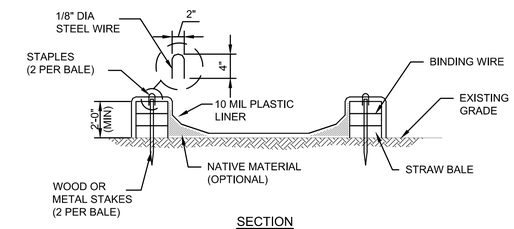

NOTES:

1. ADJUST SIZE TO ADEQUATELY HANDLE CONCRETE WASHING VOLUMES ASSOCIATED WITH SCHEDULED CONCRETE CONSTRUCTION.
2. WOOD STAKES ARE A MINIMUM SIZE OF 2" X 2"
3. DRIVE STAKES 1'-6" TO 2'-0" INTO THE GROUND.
4. THE SOIL BASE MUST BE FREE OF ROCKS AND SHARP OBJECTS.
5. LOCATE THE WASHOUT FIFTY (50) FEET OR MORE FROM STORM DRAINS, DITCHES, SWALES, OR WATER BODIES.
6. REMOVE THE CONCRETE WAHOUT WHEN CONSTRUCTION IS COMPLETE AND RESTORE AREA.

4 CONCRETE WASHOUT AREA DETAIL
NOT TO SCALE

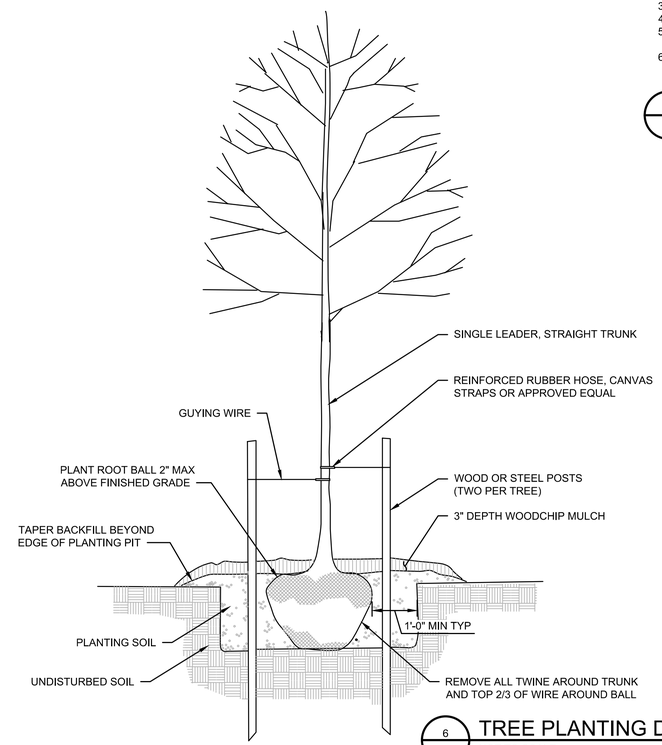

TREE PLANTING NOTES:

1. PROTECT TREE TOP AND ROOT BALL FROM DAMAGE DURING TRANSPORTATION AND PLANTING
2. EXCAVATE CIRCULAR SHAPE PIT. LOOSEN PIT BOTTOM PRIOR TO PLANTING.
3. BACKFILL WITH PLANTING SOIL, CAREFULLY TAMPING SOIL UNDER AND AROUND BASE OF BALL TO PREVENT VOIDS. TAMP TO 1/2 DEPTH OF PIT AND THEN THOROUGHLY WATER. THEN COMPLETE BACKFILL TO PROPER GRADE. FLOOD PIT AGAIN SO THAT BACKFILL IS SATURATED AND SETTLED.
4. MAINTAIN TREE BY WATERING WHEN NECESSARY, REMOVING DEAD OR DYING BRANCHES, REMOVING SPROUTS AND SUCKERS, TIGHTENING, REPAIRING OR REPLACING STAKES, MAINTAIN MULCH TO 3" DEPTH, AND WEEDING.
5. REMOVE AND REPLACE TREE IF IMPAIRED, DEAD OR DYING DURING THE ONE YEAR PERIOD FROM INITIAL ACCEPTANCE.

NOTE: REMOVE GUY WIRES AND POSTS AFTER ONE GROWING SEASON

6 TREE PLANTING DETAIL
NOT TO SCALE

RECORD DOCUMENT

THE ORIGINAL CONTRACT DOCUMENTS, PREPARED BY HDR (ENGINEER), HAVE BEEN MODIFIED TO INCORPORATE FIELD CHANGES MADE BY THE CONTRACTOR BASED ON AS-BUILT REDLINES PROVIDED BY THE CONTRACTOR AND OTHER DATA ASSOCIATED WITH CHANGES IN THE WORK AUTHORIZED BY THE CLIENT. THE ENGINEER REPRESENTS THAT THESE RECORD DRAWINGS HAVE BEEN PREPARED ON THE BASIS OF THIS INFORMATION PROVIDED TO THE ENGINEER, BUT MAKES NO REPRESENTATIONS AS TO THE ACCURACY OR COMPLETENESS OF SUCH INFORMATION.

ISSUE	DATE	DESCRIPTION
	02-07-2024	AS-BUILT

PROJECT MANAGER	KYLE SCHWIETERMAN
DESIGN BY	BKH
DRAWN BY	VKN
APPROVED BY	
PROJECT NUMBER	10062733

DELAWARE COUNTY REGIONAL SEWER DISTRICT
50 CHANNING STREET, DELAWARE, OHIO 43015

PEACHBLOW PUMP STATION AND FORCEMAIN UPGRADE PROJECT

FORCEMAIN AND GRAVITY SEWER

GENERAL

EROSION AND SEDIMENTATION CONTROL DETAILS

0 30' 60'
SCALE: 1"=30'

FILENAME G-08.DWG
SCALE AS NOTED

SHEET
G-08

CIVIL MAPPING SYMBOLOGY

- EMBANKMENT SLOPE (CUT)
- EMBANKMENT SLOPE (FILL)
- H:V — EMBANKMENT SLOPE RIGHT ARROW RIGHT
- H:V — EMBANKMENT SLOPE LEFT ARROW LEFT
- 123 — SPOT ELEVATION/POINT #
- SURVEY BENCHMARK
- CP-X — SURVEY CONTROL POINT
- HORIZONTAL CONTROL POINT
- VERTICAL CONTROL POINT
- SECTION CORNER MONUMENT
- SECTION CORNER NO MONUMENT
- X — IDENTIFICATION AND APPROXIMATE LOCATION OF SOIL TEST HOLE
- X — TEST PIT
- X — SOIL BORING
- BUOY
- FLOW ARROW
- WATER LEVEL IN SECTION/PROFILE
- TIDE GAUGE
- EXISTING UTILITY POLE
- DOWNGUY
- J X — EXTERIOR UTILITY JUNCTION BOX
- XXX — INTERSTATE HIGHWAY SYMBOL
- XXX — US HIGHWAY SYMBOL
- XXX — STATE HIGHWAY SYMBOL
- HAY BALE SILT CHECK
- TEMPORARY SEDIMENT TRAP
- X — PIEZOMETER
- RX — RAIL SIGNAL
- RAIL SWITCH
- SIGN
- In — TIRE TREDDLE
- TRAFFIC ARM WITH CARD READER
- TRAFFIC ARM MECHANICAL SWING

- CO — CLEANOUT
- CULVERT END SYMBOL (WITH CULVERT SHOWN BETWEEN SYMBOLS)
- X — FIRE HYDRANT
- F — FUEL OIL METER
- F — FUEL OIL MANHOLE
- F — FUEL OIL VAULT
- GT — GREASE TRAP
- GC — GRIT CHAMBER
- HEADWALL
- I — INDUSTRIAL WASTE WATER METER
- I — INDUSTRIAL WASTE WATER MANHOLE
- G — NATURAL GAS METER
- G — NATURAL GAS RECEIVER
- G — NATURAL GAS TRAP
- G — NATURAL GAS LINE VAULT
- MW — MONITORING WELL
- X — POST INDICATOR VALVE
- PS X — PUMP STATION
- S — SANITARY MANHOLE
- ST — SEPTIC TANK
- X — TANK BELOW GROUND
- X — TANK HORIZONTAL ABOVE GROUND
- X — TANK VERTICAL ABOVE GROUND

- CB — STORM CATCH BASIN
- CB — STORM ROUND CATCH BASIN
- D — STORM DRAINAGE MANHOLE
- WATER/AIR VENT
- W — WATER BACKFLOW PREVENTER
- WATER BLOWOFF
- W — WATER METER
- WSO — WATER SHUTOFF
- WS — WATER SOFTENER
- W — WATER VALVE VAULT
- VALVE

UTILITY/CIVIL LINE SYMBOLOGY

- PIPELINE
- LARGE PIPELINE
- UTILITY BENEATH STRUCTURE
- RAILROAD
- CENTERLINE
- BOTTOM OF DITCH
- PROPERTY LINE
- SANITARY EASEMENT
- TEMPORARY EASEMENT
- EXISTING EASEMENT
- LIMITS OF CONSTRUCTION
- ROW
- EXISTING CONTOUR (MINOR)
- 25 — EXISTING CONTOUR W/ELEVATION (MAJOR)
- EXISTING FENCE
- EXISTING VEGETATION/BRUSH LINE
- X — FENCE - BARB WIRE
- FENCE - CHAIN LINK
- X — FENCE - FIELD
- FENCE - OTHER
- FENCE - WOOD
- XX — FENCE - WOVEN WIRE
- FLOOD LIMIT (25 YEAR)
- FLOOD LIMIT (50 YEAR)
- FLOOD LIMIT (100 YEAR)
- FLOOD LIMIT (200 YEAR)
- FLOOD LIMIT (500 YEAR)
- HIGHWAY GUARDRAIL
- LEVEE TOP
- LEVEE TOE
- NEW CONTOUR (MINOR)
- 25 — NEW CONTOUR (MAJOR)
- ROCK BERM
- SILT FENCE
- TOE OF SLOPE
- TOP OF SLOPE

- FO — FIBER OPTIC
- IW — FUEL OIL
- G — NATURAL GAS
- IW — INDUSTRIAL WASTE WATER
- SS — SANITARY SEWER
- SD — STORM SEWER
- W — DOMESTIC WATER
- NPW — DOMESTIC WATER NON-POTABLE

- AS-BUILT ALIGNMENT
- AS-BUILT MANHOLE
- AS-BUILT TRACER BOX
- V — AS-BUILT AIR RELEASE VALVE
- AS-BUILT FITTING

RECORD DOCUMENT

THE ORIGINAL CONTRACT DOCUMENTS, PREPARED BY HDR (ENGINEER), HAVE BEEN MODIFIED TO INCORPORATE FIELD CHANGES MADE BY THE CONTRACTOR BASED ON AS-BUILT REDLINES PROVIDED BY THE CONTRACTOR AND OTHER DATA ASSOCIATED WITH CHANGES IN THE WORK AUTHORIZED BY THE CLIENT. THE ENGINEER REPRESENTS THAT THESE RECORD DRAWINGS HAVE BEEN PREPARED ON THE BASIS OF THIS INFORMATION PROVIDED TO THE ENGINEER, BUT MAKES NO REPRESENTATIONS AS TO THE ACCURACY OR COMPLETENESS OF SUCH INFORMATION.

GENERAL NOTES:

1. THIS IS A STANDARD CIVIL SYMBOLOGY SHEET. ALL SYMBOLS ARE NOT NECESSARILY USED ON THIS PROJECT.
2. SCREENING OR SHADING OF WORK IS USED TO INDICATE EXISTING COMPONENTS OR TO DE-EMPHASIZE PROPOSED IMPROVEMENTS TO HIGHLIGHT SELECTED TRADE WORK. REFER TO CONTEXT OF EACH SHEET FOR USAGE.

ISSUE	DATE	DESCRIPTION
	02-07-2024	AS-BUILT

PROJECT MANAGER	KYLE SCHWIETERMAN
DESIGN BY	BKH
DRAWN BY	AMS
APPROVED BY	DLM
PROJECT NUMBER	10062733

DELAWARE COUNTY REGIONAL SEWER DISTRICT
50 CHANNING STREET, DELAWARE, OHIO 43015

PEACHBLOW PUMP STATION AND FORCEMAIN UPGRADE PROJECT

FORCEMAIN AND GRAVITY SEWER

CIVIL LEGEND

0 30' 60'
SCALE: 1"=30'

FILENAME: C-01.DWG
SCALE: NOT TO SCALE

SHEET: C-01

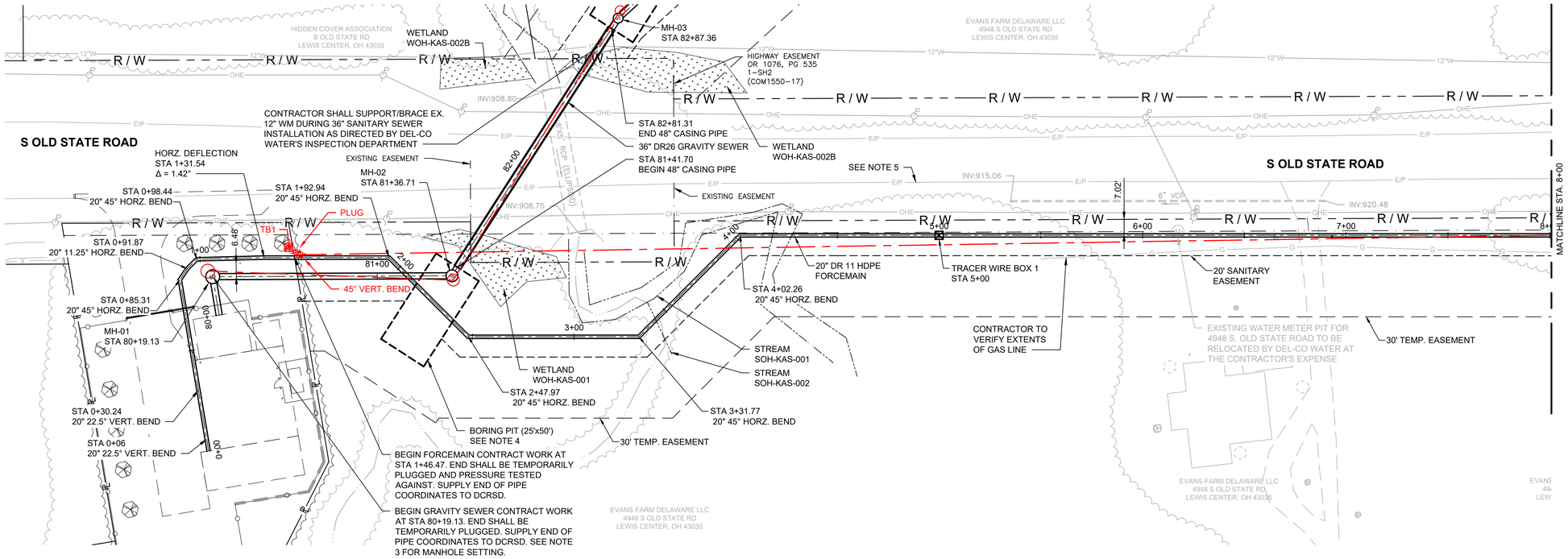

PLAN VIEW

SCALE: 1"=30'

NOTES:

1. ALL BORING PITS ARE SHOWN CONCEPTUALLY. ACTUAL LOCATIONS OF BORE PITS MAY REQUIRE EXISTING UTILITIES TO BE RELOCATED AT NO ADDITIONAL COST TO THE SANITARY ENGINEER.
2. THE EXISTING PUMP STATION AND INFLUENT SEWER SHALL REMAIN IN PLACE AND OPERATIONAL UNTIL THE NEW PUMP STATION, FORCEMAIN, AND GRAVITY SEWER ARE CONSTRUCTED, TESTED, AND APPROVED.
3. FORCEMAIN AND GRAVITY SEWER CONTRACTOR SHALL PLACE MANHOLE CASTINGS AT THE ELEVATION AND STATION WITH OFFSET TO THE CENTER OF THE CASTING OR AS DIRECTED BY THE SANITARY ENGINEER. PLACE THE MANHOLE BASE AT THE ELEVATION AND STATION WITH OFFSET TO AGREE WITH THE PIPE STATION, OFFSET AND PIPE INVERT ELEVATION ACCORDING TO THE CONTRACT DOCUMENTS OR AS DIRECTED BY THE SANITARY ENGINEER.
4. PROVIDE BORE PIT PROTECTION. REFER TO DETAIL 1 ON SHEET G-07.
5. THE CONTRACTOR SHALL PROTECT THE ADJACENT PAVEMENT FROM DAMAGE DURING CONSTRUCTION.
6. THE PROFILE DEPICTED ON THIS SHEET IS FROM THE ORIGINAL CONTRACT DOCUMENTS AND IS FOR REFERENCE ONLY. AS-BUILT CONDITIONS MAY VARY. THE APPROXIMATE LOCATIONS AND ELEVATIONS OF AS-BUILT FEATURES, SUCH AS BENDS AND ARVS, ARE SHOWN BASED ON INFORMATION FURNISHED BY THE CONTRACTOR.

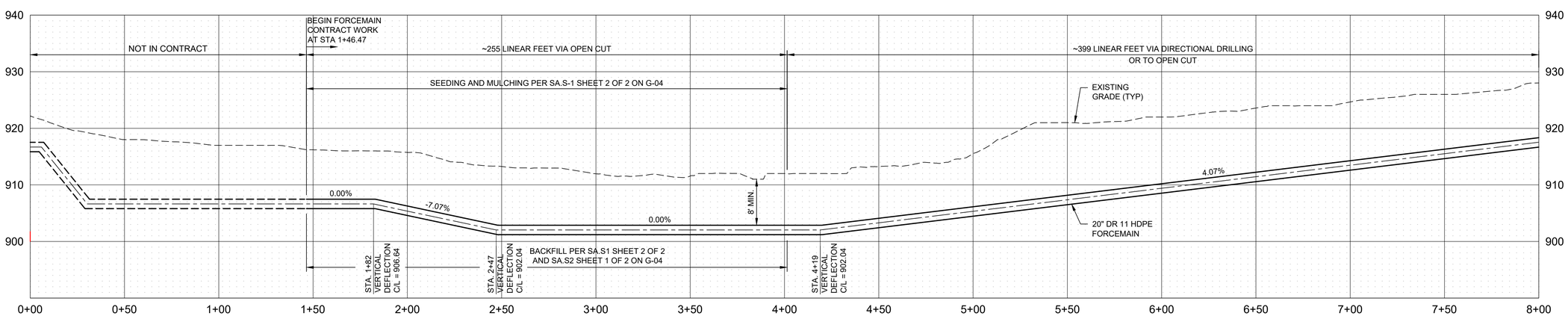

RECORD DOCUMENT

THE ORIGINAL CONTRACT DOCUMENTS, PREPARED BY HDR (ENGINEER), HAVE BEEN MODIFIED TO INCORPORATE FIELD CHANGES MADE BY THE CONTRACTOR BASED ON AS-BUILT REDLINES PROVIDED BY THE CONTRACTOR AND OTHER DATA ASSOCIATED WITH CHANGES IN THE WORK AUTHORIZED BY THE CLIENT. THE ENGINEER REPRESENTS THAT THESE RECORD DRAWINGS HAVE BEEN PREPARED ON THE BASIS OF THIS INFORMATION PROVIDED TO THE ENGINEER, BUT MAKES NO REPRESENTATIONS AS TO THE ACCURACY OR COMPLETENESS OF SUCH INFORMATION.

ISSUE	DATE	DESCRIPTION
	02-07-2024	AS-BUILT

PROJECT MANAGER	KYLE SCHWIETERMAN
DESIGN BY	LCT
DRAWN BY	VKN
APPROVED BY	DLM
PROJECT NUMBER	10062733

DELAWARE COUNTY REGIONAL SEWER DISTRICT
50 CHANNING STREET, DELAWARE, OHIO 43015

PEACHBLOW PUMP STATION AND FORCEMAIN UPGRADE PROJECT

FORCEMAIN AND GRAVITY SEWER

CIVIL
FORCEMAIN PLAN AND PROFILE
STATION 0+00 TO 8+00

0 30' 60'
SCALE: 1"=30'

FILENAME C-02_C-12.DWG
SCALE 1" = 30'

SHEET
C-02

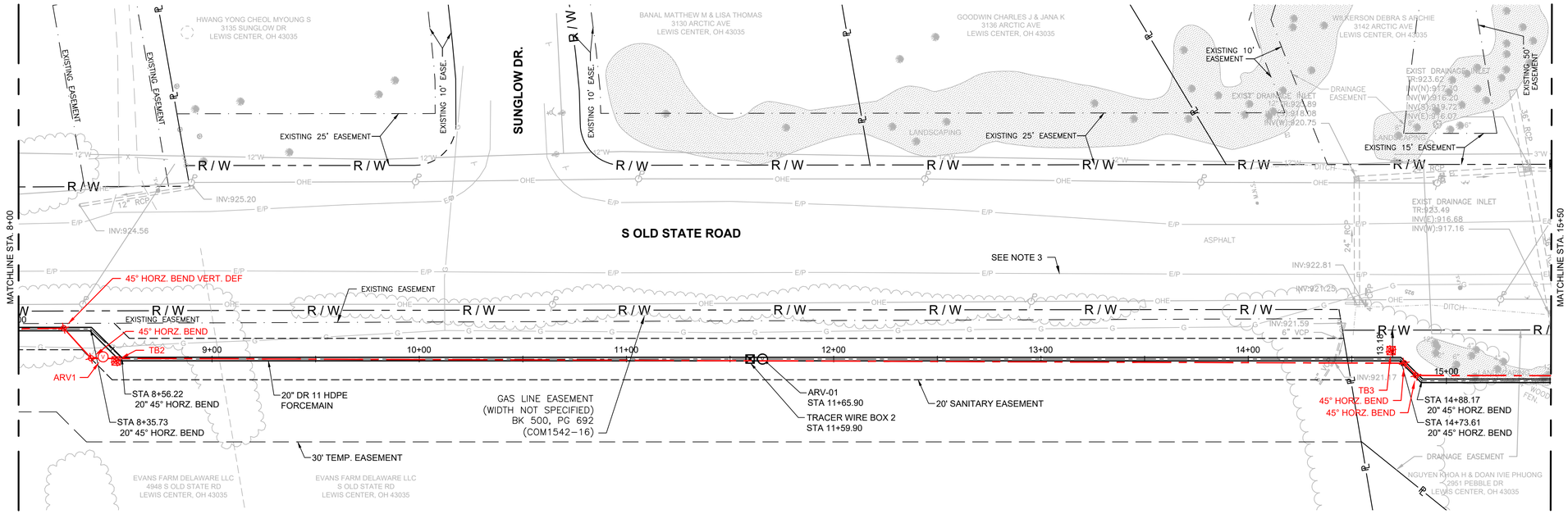

PLAN VIEW

SCALE: 1"=30'

NOTES:

1. HORIZONTAL DIRECTIONAL DRILLING SHALL BE DEEP ENOUGH TO NOT DAMAGE TREE ROOT SYSTEM.
2. CONTRACTOR SHALL FIELD LOCATE AIR RELEASE VALVE AT ACTUAL HIGH POINT. LOCATION SHOWN ON PLAN IS APPROXIMATE.
3. THE CONTRACTOR SHALL PROTECT THE ADJACENT PAVEMENT FROM DAMAGE DURING CONSTRUCTION.
4. THE PROFILE DEPICTED ON THIS SHEET IS FROM THE ORIGINAL CONTRACT DOCUMENTS AND IS FOR REFERENCE ONLY. AS-BUILT CONDITIONS MAY VARY. THE APPROXIMATE LOCATIONS AND ELEVATIONS OF AS-BUILT FEATURES, SUCH AS BENDS AND ARVS, ARE SHOWN BASED ON INFORMATION FURNISHED BY THE CONTRACTOR.

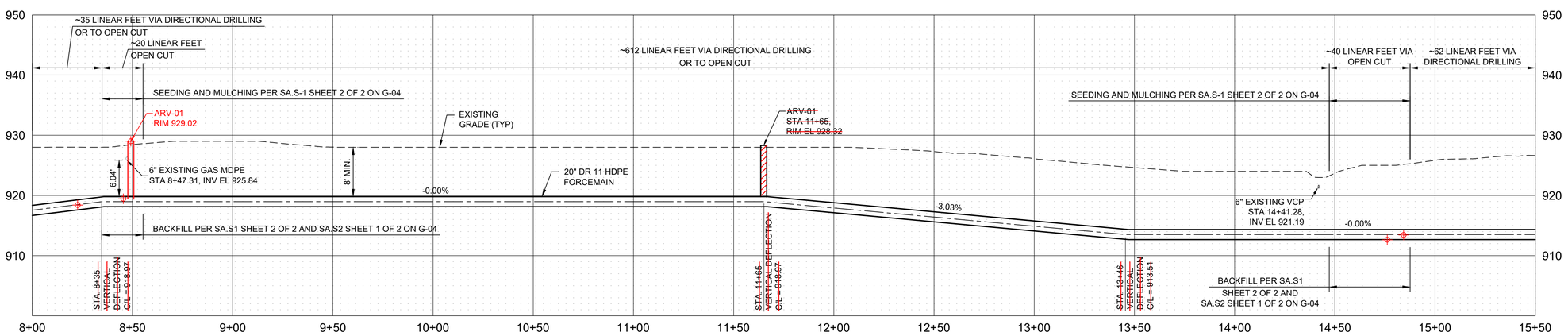

RECORD DOCUMENT

THE ORIGINAL CONTRACT DOCUMENTS, PREPARED BY HDR (ENGINEER), HAVE BEEN MODIFIED TO INCORPORATE FIELD CHANGES MADE BY THE CONTRACTOR BASED ON AS-BUILT REDLINES PROVIDED BY THE CONTRACTOR AND OTHER DATA ASSOCIATED WITH CHANGES IN THE WORK AUTHORIZED BY THE CLIENT. THE ENGINEER REPRESENTS THAT THESE RECORD DRAWINGS HAVE BEEN PREPARED ON THE BASIS OF THIS INFORMATION PROVIDED TO THE ENGINEER, BUT MAKES NO REPRESENTATIONS AS TO THE ACCURACY OR COMPLETENESS OF SUCH INFORMATION.

ISSUE	DATE	DESCRIPTION
	02-07-2024	AS-BUILT

PROJECT MANAGER	KYLE SCHWIETERMAN
DESIGN BY	LCT
DRAWN BY	VKN
APPROVED BY	DLM
PROJECT NUMBER	10062733

DELAWARE COUNTY REGIONAL SEWER DISTRICT
50 CHANNING STREET, DELAWARE, OHIO 43015

PEACHBLOW PUMP STATION AND FORCEMAIN UPGRADE PROJECT

FORCEMAIN AND GRAVITY SEWER

CIVIL
FORCEMAIN PLAN AND PROFILE
STATION 8+00 TO 15+50

0 30' 60'
SCALE: 1"=30'

FILENAME C-02_C-12.DWG
SCALE 1" = 30'

SHEET
C-03

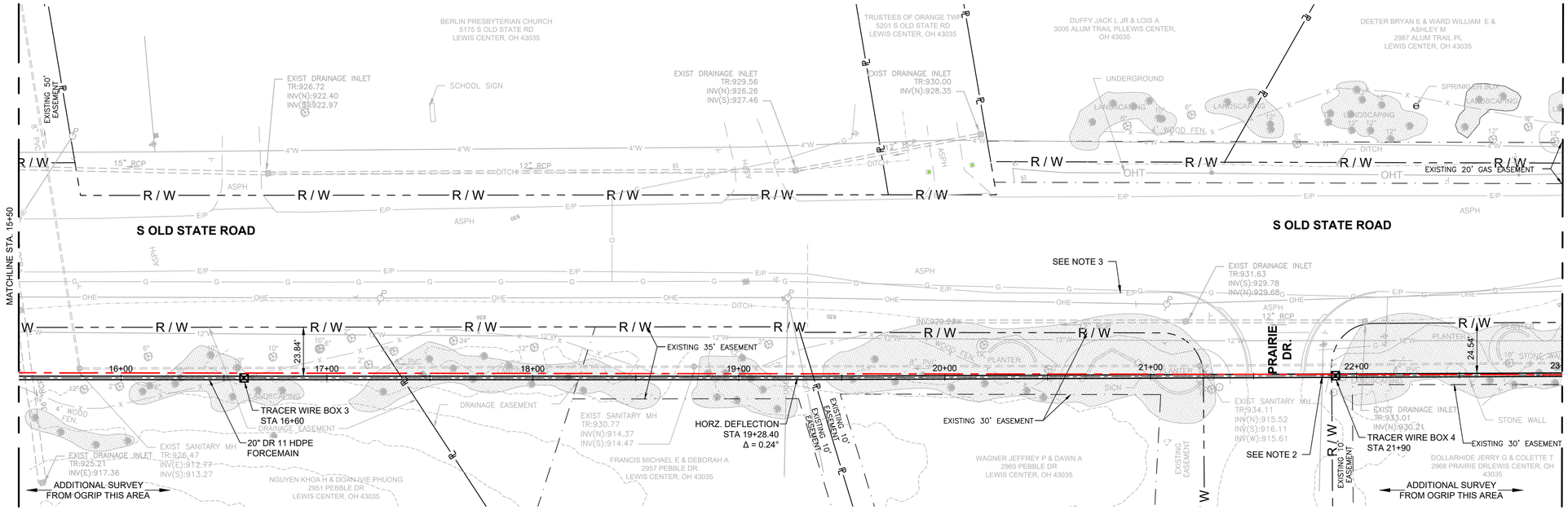

PLAN VIEW

SCALE: 1"=30'

NOTE:

1. HORIZONTAL DIRECTIONAL DRILLING SHALL BE DEEP ENOUGH TO NOT DAMAGE TREE ROOT SYSTEM.
2. CONTRACTOR SHALL POTHOLE THE EXISTING 8" WM TO DETERMINE THE EXACT LOCATION AND ELEVATION. THIS INFORMATION SHALL BE GIVEN TO THE DESIGN ENGINEER AND DEL-CO WATER TO DETERMINE IF A CONFLICT EXISTS, THE DESIGN ENGINEER WILL BE REQUIRED TO DESIGN A RELOCATION PLAN FOR THE WM OR ADJUST THE PROPOSED SANITARY SEWER. TIME EXTENSIONS WILL BE GIVEN, AS NEEDED, HOWEVER DELAY COSTS WILL NOT BE ALLOWED.
3. THE CONTRACTOR SHALL PROTECT THE ADJACENT PAVEMENT FROM DAMAGE DURING CONSTRUCTION.
4. THE PROFILE DEPICTED ON THIS SHEET IS FROM THE ORIGINAL CONTRACT DOCUMENTS AND IS FOR REFERENCE ONLY. AS-BUILT CONDITIONS MAY VARY. THE APPROXIMATE LOCATIONS AND ELEVATIONS OF AS-BUILT FEATURES, SUCH AS BENDS AND ARVS, ARE SHOWN BASED ON INFORMATION FURNISHED BY THE CONTRACTOR.

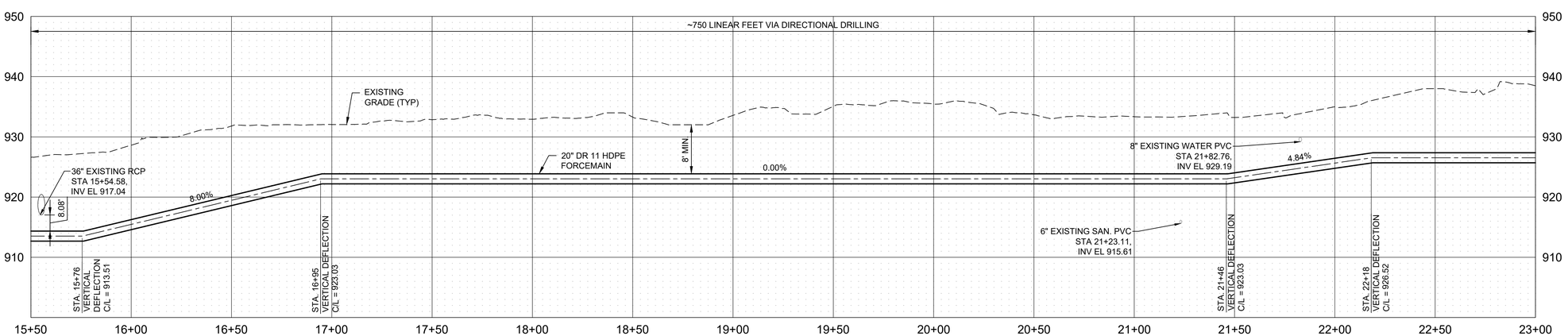

RECORD DOCUMENT

THE ORIGINAL CONTRACT DOCUMENTS, PREPARED BY HDR (ENGINEER), HAVE BEEN MODIFIED TO INCORPORATE FIELD CHANGES MADE BY THE CONTRACTOR BASED ON AS-BUILT REDLINES PROVIDED BY THE CONTRACTOR AND OTHER DATA ASSOCIATED WITH CHANGES IN THE WORK AUTHORIZED BY THE CLIENT. THE ENGINEER REPRESENTS THAT THESE RECORD DRAWINGS HAVE BEEN PREPARED ON THE BASIS OF THIS INFORMATION PROVIDED TO THE ENGINEER, BUT MAKES NO REPRESENTATIONS AS TO THE ACCURACY OR COMPLETENESS OF SUCH INFORMATION.

ISSUE	DATE	DESCRIPTION
	02-07-2024	AS-BUILT

PROJECT MANAGER	KYLE SCHWIETERMAN
DESIGN BY	LCT
DRAWN BY	VKN
APPROVED BY	DLM
PROJECT NUMBER	10062733

DELAWARE COUNTY REGIONAL SEWER DISTRICT
50 CHANNING STREET, DELAWARE, OHIO 43015

PEACHBLOW PUMP STATION AND FORCEMAIN UPGRADE PROJECT

FORCEMAIN AND GRAVITY SEWER

CIVIL
FORCEMAIN PLAN AND PROFILE
STATION 15+50 TO 23+00

0 30' 60'
SCALE: 1"=30'

FILENAME C-02_C-12.DWG
SCALE 1" = 30'

SHEET
C-04

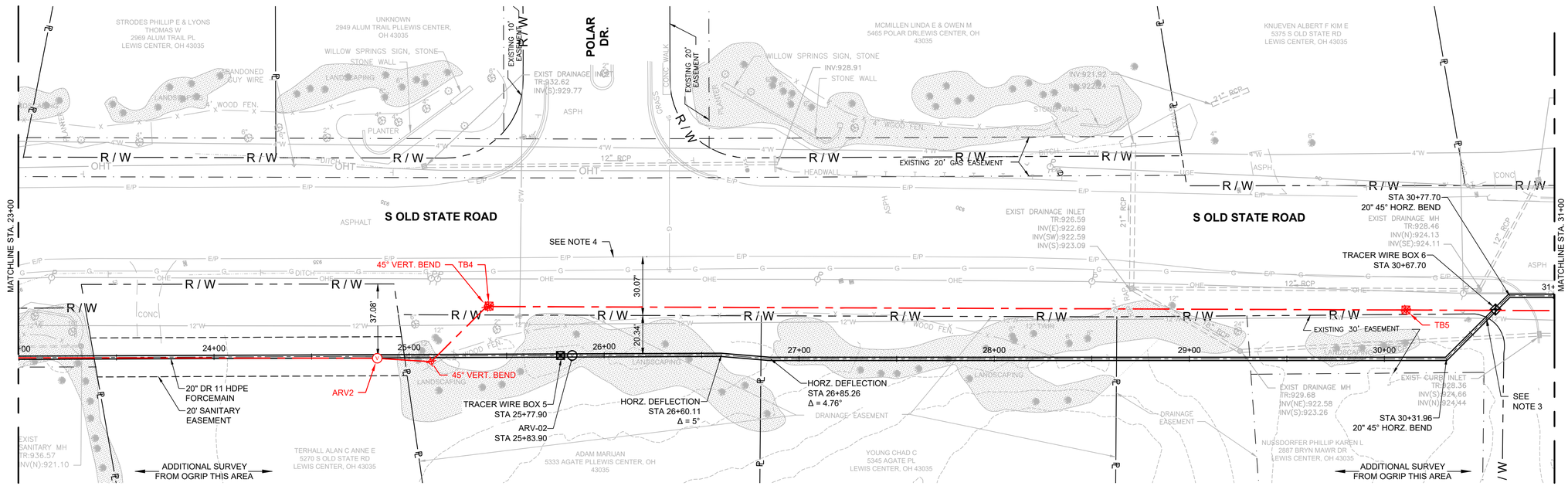

PLAN VIEW

SCALE: 1"=30'

NOTES:

1. HORIZONTAL DIRECTIONAL DRILLING SHALL BE DEEP ENOUGH TO NOT DAMAGE TREE ROOT SYSTEM.
2. CONTRACTOR SHALL FIELD LOCATE AIR RELEASE VALVE AT ACTUAL HIGH POINT. LOCATION SHOWN ON PLAN IS APPROXIMATE.
3. CONTRACTOR SHALL POTHOLE THE EXISTING 12" WM TO DETERMINE THE EXACT LOCATION AND ELEVATION. THIS INFORMATION SHALL BE GIVEN TO THE DESIGN ENGINEER AND DEL-CO WATER TO DETERMINE IF A CONFLICT EXISTS, THE DESIGN ENGINEER WILL BE REQUIRED TO DESIGN A RELOCATION PLAN FOR THE WM OR ADJUST THE PROPOSED SANITARY SEWER. TIME EXTENSIONS WILL BE GIVEN, AS NEEDED, HOWEVER DELAY COSTS WILL NOT BE ALLOWED.
4. THE CONTRACTOR SHALL PROTECT THE ADJACENT PAVEMENT FROM DAMAGE DURING CONSTRUCTION.
5. THE PROFILE DEPICTED ON THIS SHEET IS FROM THE ORIGINAL CONTRACT DOCUMENTS AND IS FOR REFERENCE ONLY. AS-BUILT CONDITIONS MAY VARY. THE APPROXIMATE LOCATIONS AND ELEVATIONS OF AS-BUILT FEATURES, SUCH AS BENDS AND ARVS, ARE SHOWN BASED ON INFORMATION FURNISHED BY THE CONTRACTOR.

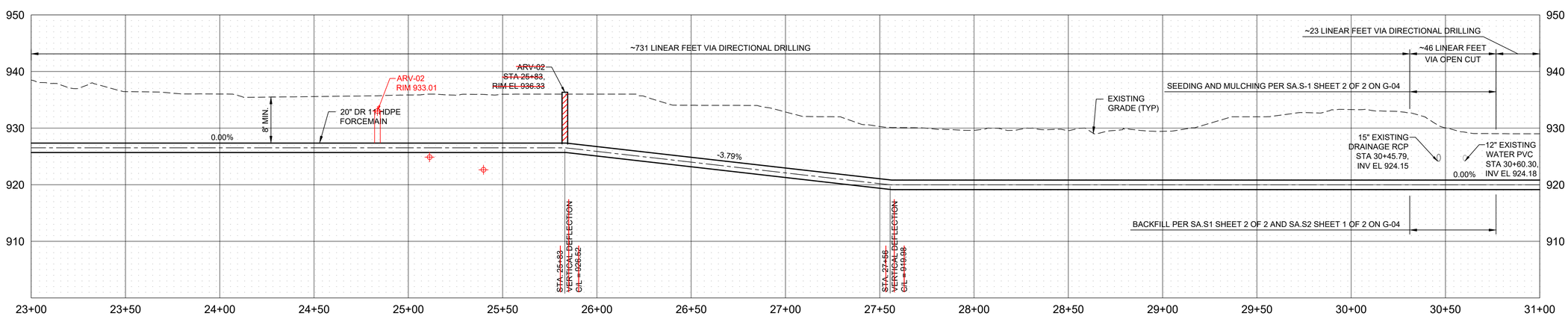

RECORD DOCUMENT

THE ORIGINAL CONTRACT DOCUMENTS, PREPARED BY HDR (ENGINEER), HAVE BEEN MODIFIED TO INCORPORATE FIELD CHANGES MADE BY THE CONTRACTOR BASED ON AS-BUILT REDLINES PROVIDED BY THE CONTRACTOR AND OTHER DATA ASSOCIATED WITH CHANGES IN THE WORK AUTHORIZED BY THE CLIENT. THE ENGINEER REPRESENTS THAT THESE RECORD DRAWINGS HAVE BEEN PREPARED ON THE BASIS OF THIS INFORMATION PROVIDED TO THE ENGINEER, BUT MAKES NO REPRESENTATIONS AS TO THE ACCURACY OR COMPLETENESS OF SUCH INFORMATION.

ISSUE	DATE	DESCRIPTION
	02-07-2024	AS-BUILT

PROJECT MANAGER	KYLE SCHWIETERMAN
DESIGN BY	LCT
DRAWN BY	VKN
APPROVED BY	DLM
PROJECT NUMBER	10062733

DELAWARE COUNTY REGIONAL SEWER DISTRICT
50 CHANNING STREET, DELAWARE, OHIO 43015

PEACHBLOW PUMP STATION AND FORCEMAIN UPGRADE PROJECT

FORCEMAIN AND GRAVITY SEWER

CIVIL
FORCEMAIN PLAN AND PROFILE
STATION 23+00 TO 31+00

0 30' 60'
SCALE: 1"=30'

FILENAME C-02_C-12.DWG
SCALE 1" = 30'

SHEET
C-05

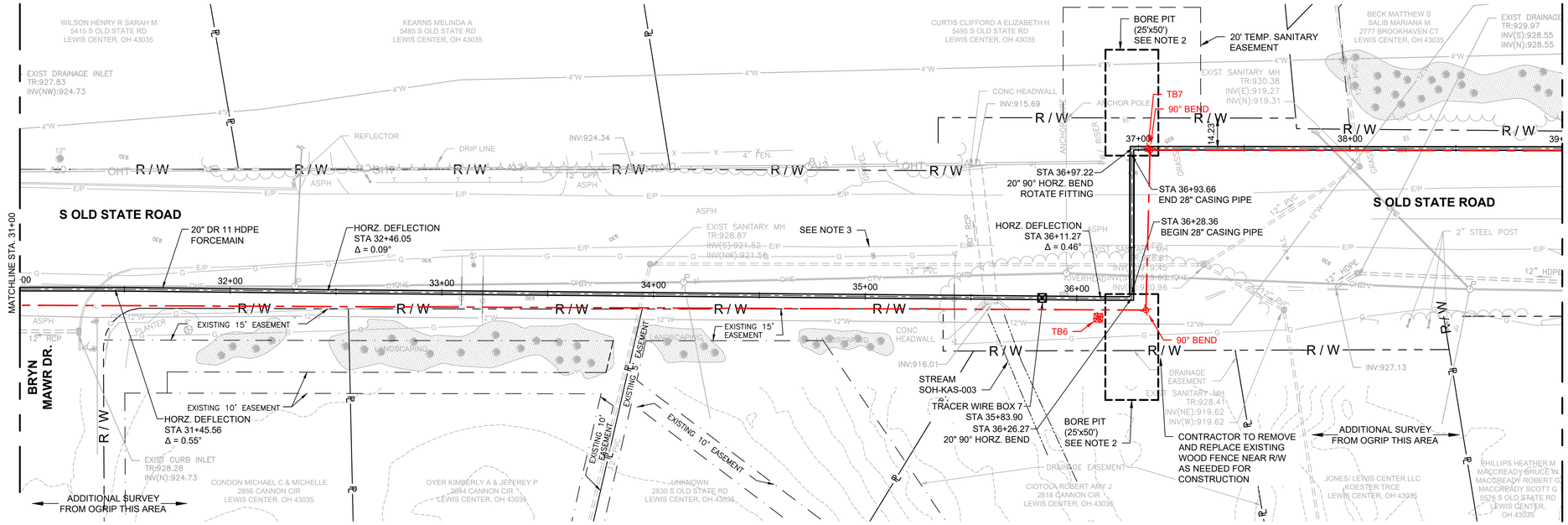

PLAN VIEW

SCALE: 1"=30'

NOTES:

1. ALL BORING PITS ARE SHOWN CONCEPTUALLY. ACTUAL LOCATIONS OF BORE PITS MAY REQUIRE EXISTING UTILITIES TO BE RELOCATED AT NO ADDITIONAL COST TO THE SANITARY ENGINEER.
2. PROVIDE BORE PIT PROTECTION. REFER TO DETAIL 1 ON SHEET G-07.
3. THE CONTRACTOR SHALL PROTECT THE ADJACENT PAVEMENT FROM DAMAGE DURING CONSTRUCTION.
4. THE PROFILE DEPICTED ON THIS SHEET IS FROM THE ORIGINAL CONTRACT DOCUMENTS AND IS FOR REFERENCE ONLY. AS-BUILT CONDITIONS MAY VARY. THE APPROXIMATE LOCATIONS AND ELEVATIONS OF AS-BUILT FEATURES, SUCH AS BENDS AND ARVS, ARE SHOWN BASED ON INFORMATION FURNISHED BY THE CONTRACTOR.

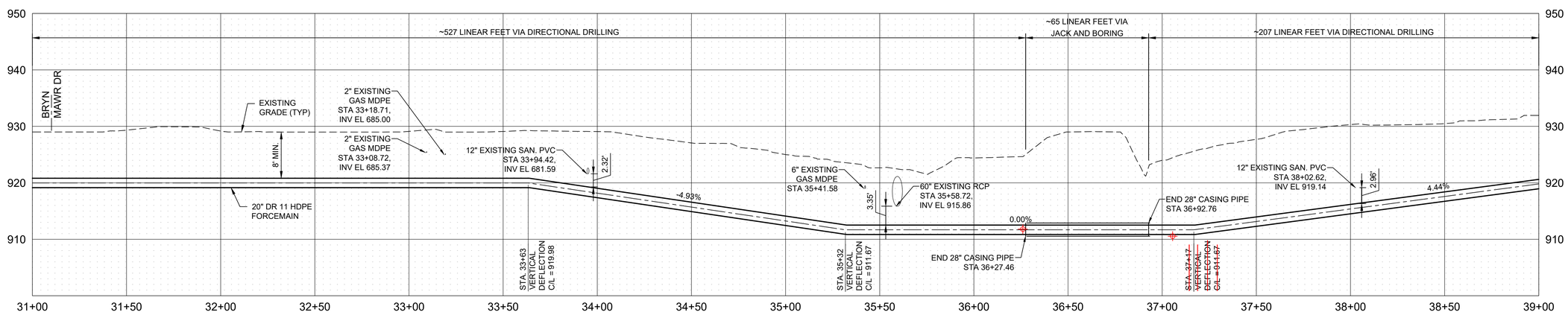

RECORD DOCUMENT

THE ORIGINAL CONTRACT DOCUMENTS, PREPARED BY HDR (ENGINEER), HAVE BEEN MODIFIED TO INCORPORATE FIELD CHANGES MADE BY THE CONTRACTOR BASED ON AS-BUILT REDLINES PROVIDED BY THE CONTRACTOR AND OTHER DATA ASSOCIATED WITH CHANGES IN THE WORK AUTHORIZED BY THE CLIENT. THE ENGINEER REPRESENTS THAT THESE RECORD DRAWINGS HAVE BEEN PREPARED ON THE BASIS OF THIS INFORMATION PROVIDED TO THE ENGINEER, BUT MAKES NO REPRESENTATIONS AS TO THE ACCURACY OR COMPLETENESS OF SUCH INFORMATION.

ISSUE	DATE	DESCRIPTION
	02-07-2024	AS-BUILT

PROJECT MANAGER	KYLE SCHWIETERMAN
DESIGN BY	LCT
DRAWN BY	VKN
APPROVED BY	DLM
PROJECT NUMBER	10062733

DELAWARE COUNTY REGIONAL SEWER DISTRICT
50 CHANNING STREET, DELAWARE, OHIO 43015

PEACHBLOW PUMP STATION AND FORCEMAIN UPGRADE PROJECT

FORCEMAIN AND GRAVITY SEWER

CIVIL
FORCEMAIN PLAN AND PROFILE
STATION 31+00 TO 39+00

0 30' 60'
SCALE: 1"=30'

FILENAME C-02_C-12.DWG
SCALE 1" = 30'

SHEET **C-06**

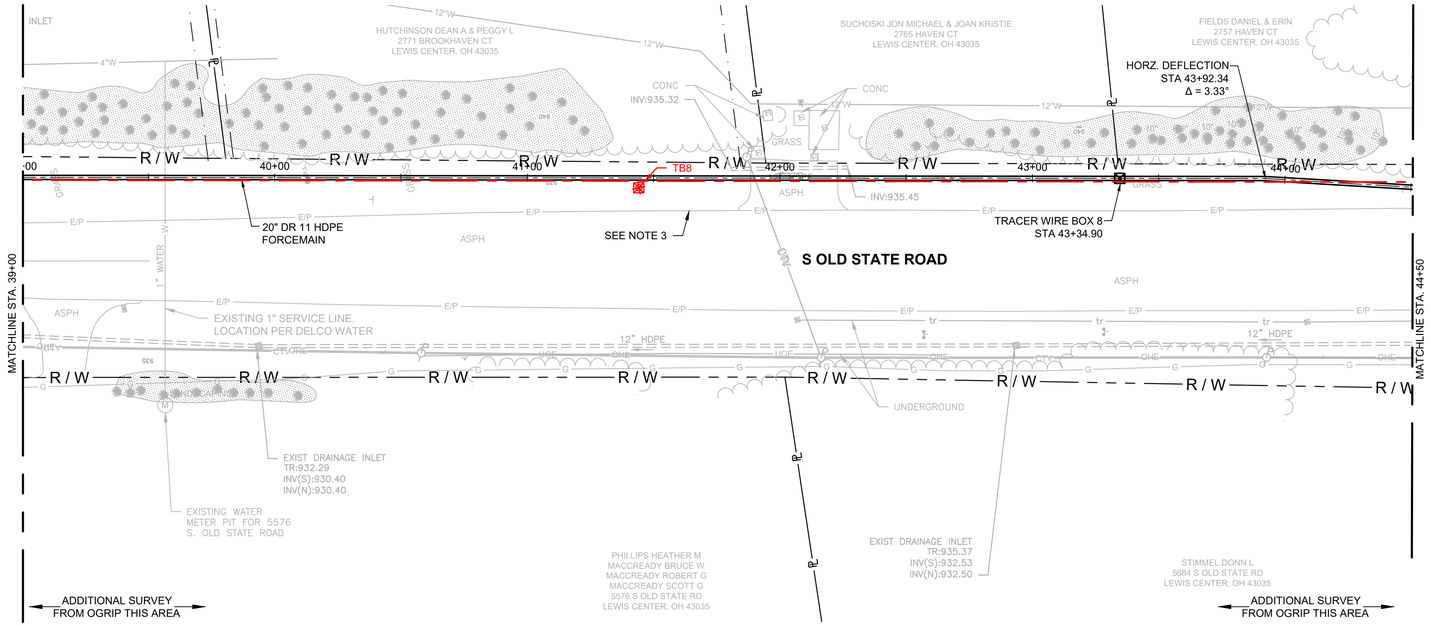

PLAN VIEW

SCALE: 1"=30'

NOTES:

1. HORIZONTAL DIRECTIONAL DRILLING SHALL BE DEEP ENOUGH TO NOT DAMAGE TREE ROOT SYSTEM.
2. CONTRACTOR SHALL FIELD LOCATE AIR RELEASE VALVE AT ACTUAL HIGH POINT. LOCATION SHOWN ON PLAN IS APPROXIMATE.
3. THE CONTRACTOR SHALL PROTECT THE ADJACENT PAVEMENT FROM DAMAGE DURING CONSTRUCTION.
4. THE PROFILE DEPICTED ON THIS SHEET IS FROM THE ORIGINAL CONTRACT DOCUMENTS AND IS FOR REFERENCE ONLY. AS-BUILT CONDITIONS MAY VARY. THE APPROXIMATE LOCATIONS AND ELEVATIONS OF AS-BUILT FEATURES, SUCH AS BENDS AND ARVS, ARE SHOWN BASED ON INFORMATION FURNISHED BY THE CONTRACTOR.

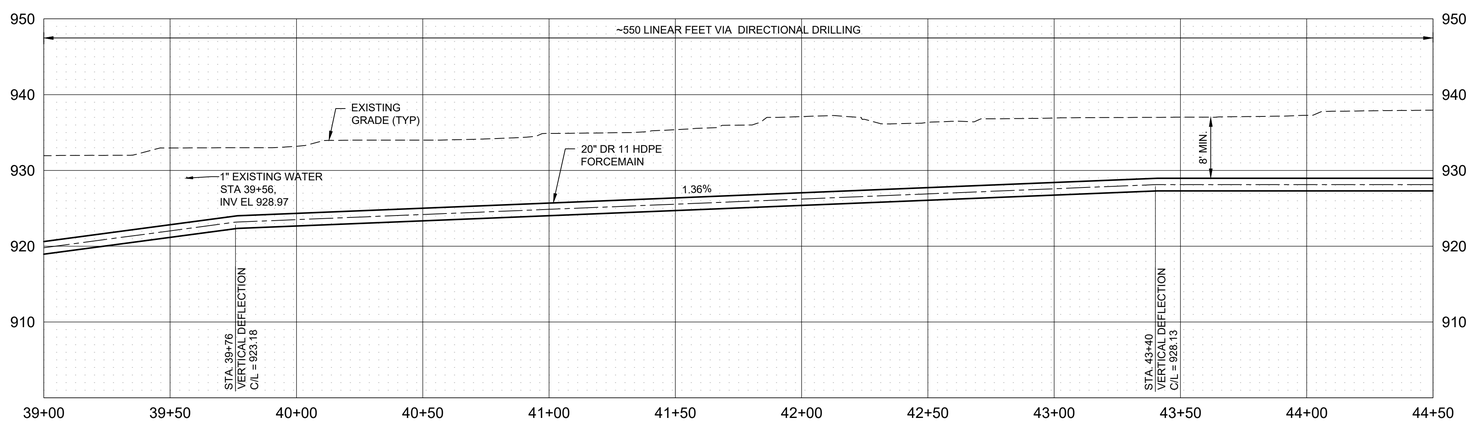

RECORD DOCUMENT

THE ORIGINAL CONTRACT DOCUMENTS, PREPARED BY HDR (ENGINEER), HAVE BEEN MODIFIED TO INCORPORATE FIELD CHANGES MADE BY THE CONTRACTOR BASED ON AS-BUILT REDLINES PROVIDED BY THE CONTRACTOR AND OTHER DATA ASSOCIATED WITH CHANGES IN THE WORK AUTHORIZED BY THE CLIENT. THE ENGINEER REPRESENTS THAT THESE RECORD DRAWINGS HAVE BEEN PREPARED ON THE BASIS OF THIS INFORMATION PROVIDED TO THE ENGINEER, BUT MAKES NO REPRESENTATIONS AS TO THE ACCURACY OR COMPLETENESS OF SUCH INFORMATION.

ISSUE	DATE	DESCRIPTION
	02-07-2024	AS-BUILT

PROJECT MANAGER	KYLE SCHWIETERMAN
DESIGN BY	LCT
DRAWN BY	VKN
APPROVED BY	DLM
PROJECT NUMBER	10062733

DELAWARE COUNTY REGIONAL SEWER DISTRICT
50 CHANNING STREET, DELAWARE, OHIO 43015

PEACHBLOW PUMP STATION AND FORCEMAIN UPGRADE PROJECT

FORCEMAIN AND GRAVITY SEWER

CIVIL
FORCEMAIN PLAN AND PROFILE
STATION 39+00 TO 44+50

0 30' 60'
SCALE: 1"=30'

FILENAME C-02_C-12.DWG
SCALE 1" = 30'

SHEET
C-07

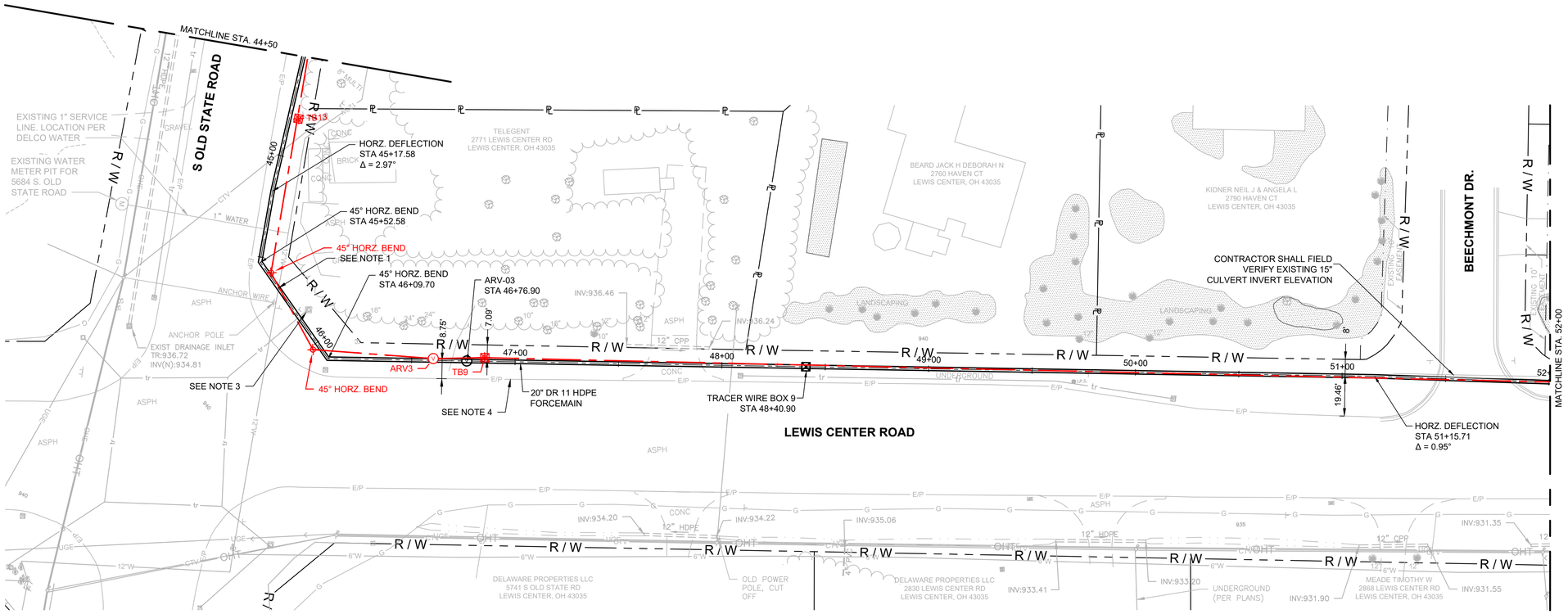

PLAN VIEW

SCALE: 1"=30'

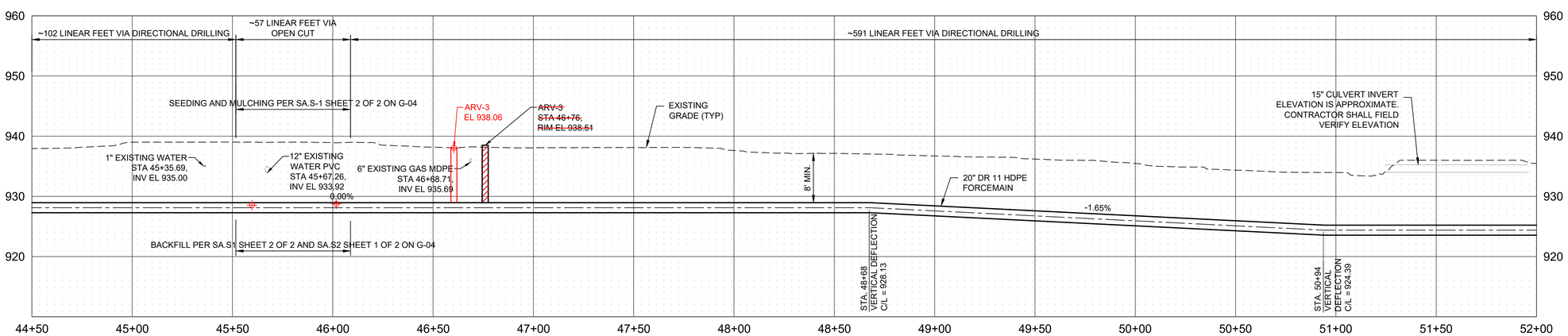

NOTES:

1. THE CONTRACTOR SHALL POTHOLE THE EXISTING 12" WM TO DETERMINE THE EXACT LOCATION AND ELEVATION. THIS INFORMATION SHALL BE GIVEN TO THE DESIGN ENGINEER AND DEL-CO WATER TO DETERMINE IF A CONFLICT EXISTS. IF A CONFLICT EXISTS, THE CONTRACTOR SHALL PROVIDE A RELOCATION PLAN FOR THE WM. TIME EXTENSIONS WILL BE GIVEN, AS NEEDED, HOWEVER DELAY COSTS WILL NOT BE ALLOWED. THE CONTRACTOR SHALL SUPPORT/BRACE THE EX. 12" WM DURING INSTALLATION OF THE 20" FORCEMAIN AS DIRECTED BY DEL-CO WATER'S INSPECTION DEPARTMENT.
2. THE CONTRACTOR SHALL FIELD LOCATE AIR RELEASE VALVE AT ACTUAL HIGH POINT. LOCATION SHOWN ON PLAN IS APPROXIMATE.
3. THE CONTRACTOR SHALL PROTECT AND SUPPORT TRAFFIC SIGNAL CONDUITS AND SIGNAL POLE DURING CONSTRUCTION.
4. THE CONTRACTOR SHALL PROTECT THE ADJACENT PAVEMENT FROM DAMAGE DURING CONSTRUCTION.
5. THE PROFILE DEPICTED ON THIS SHEET IS FROM THE ORIGINAL CONTRACT DOCUMENTS AND IS FOR REFERENCE ONLY. AS-BUILT CONDITIONS MAY VARY. THE APPROXIMATE LOCATIONS AND ELEVATIONS OF AS-BUILT FEATURES, SUCH AS BENDS AND ARVS, ARE SHOWN BASED ON INFORMATION FURNISHED BY THE CONTRACTOR.

RECORD DOCUMENT

THE ORIGINAL CONTRACT DOCUMENTS, PREPARED BY HDR (ENGINEER), HAVE BEEN MODIFIED TO INCORPORATE FIELD CHANGES MADE BY THE CONTRACTOR BASED ON AS-BUILT REDLINES PROVIDED BY THE CONTRACTOR AND OTHER DATA ASSOCIATED WITH CHANGES IN THE WORK AUTHORIZED BY THE CLIENT. THE ENGINEER REPRESENTS THAT THESE RECORD DRAWINGS HAVE BEEN PREPARED ON THE BASIS OF THIS INFORMATION PROVIDED TO THE ENGINEER, BUT MAKES NO REPRESENTATIONS AS TO THE ACCURACY OR COMPLETENESS OF SUCH INFORMATION.

ISSUE	DATE	DESCRIPTION
	02-07-2024	AS-BUILT

PROJECT MANAGER	KYLE SCHWIETERMAN
DESIGN BY	LCT
DRAWN BY	VKN
APPROVED BY	DLM
PROJECT NUMBER	10062733

DELAWARE COUNTY REGIONAL SEWER DISTRICT
50 CHANNING STREET, DELAWARE, OHIO 43015

PEACHBLOW PUMP STATION AND FORCEMAIN UPGRADE PROJECT

FORCEMAIN AND GRAVITY SEWER

CIVIL
FORCEMAIN PLAN AND PROFILE
STATION 44+50 TO 52+00

0 30' 60'
SCALE: 1"=30'

FILENAME C-02_C-12.DWG
SCALE 1" = 30'

SHEET
C-08

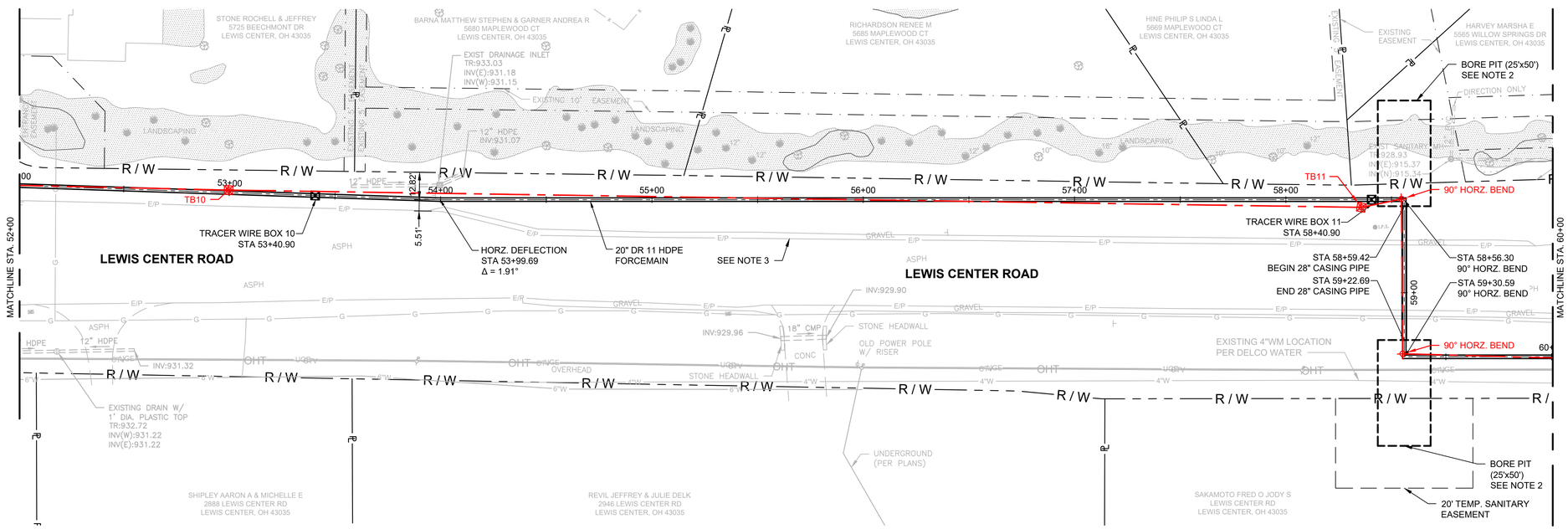

PLAN VIEW

SCALE: 1"=30'

NOTES:

1. ALL BORING PITS ARE SHOWN CONCEPTUALLY. ACTUAL LOCATIONS OF BORE PITS MAY REQUIRE EXISTING UTILITIES TO BE RELOCATED AT NO ADDITIONAL COST TO THE SANITARY ENGINEER.
2. PROVIDE BORE PIT PROTECTION. REFER TO DETAIL 1 ON SHEET G-07.
3. THE CONTRACTOR SHALL PROTECT THE ADJACENT PAVEMENT FROM DAMAGE DURING CONSTRUCTION.
4. THE PROFILE DEPICTED ON THIS SHEET IS FROM THE ORIGINAL CONTRACT DOCUMENTS AND IS FOR REFERENCE ONLY. AS-BUILT CONDITIONS MAY VARY. THE APPROXIMATE LOCATIONS AND ELEVATIONS OF AS-BUILT FEATURES, SUCH AS BENDS AND ARVS, ARE SHOWN BASED ON INFORMATION FURNISHED BY THE CONTRACTOR.

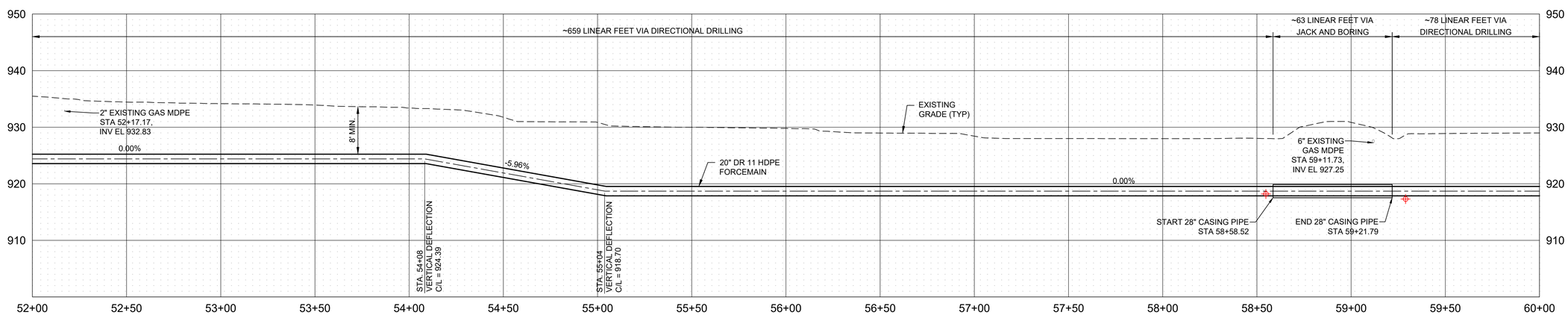

RECORD DOCUMENT

THE ORIGINAL CONTRACT DOCUMENTS, PREPARED BY HDR (ENGINEER), HAVE BEEN MODIFIED TO INCORPORATE FIELD CHANGES MADE BY THE CONTRACTOR BASED ON AS-BUILT REDLINES PROVIDED BY THE CONTRACTOR AND OTHER DATA ASSOCIATED WITH CHANGES IN THE WORK AUTHORIZED BY THE CLIENT. THE ENGINEER REPRESENTS THAT THESE RECORD DRAWINGS HAVE BEEN PREPARED ON THE BASIS OF THIS INFORMATION PROVIDED TO THE ENGINEER, BUT MAKES NO REPRESENTATIONS AS TO THE ACCURACY OR COMPLETENESS OF SUCH INFORMATION.

ISSUE	DATE	DESCRIPTION
	02-07-2024	AS-BUILT

PROJECT MANAGER	KYLE SCHWIETERMAN
DESIGN BY	LCT
DRAWN BY	VKN
APPROVED BY	DLM
PROJECT NUMBER	10062733

DELAWARE COUNTY REGIONAL SEWER DISTRICT
50 CHANNING STREET, DELAWARE, OHIO 43015

PEACHBLOW PUMP STATION AND FORCEMAIN UPGRADE PROJECT

FORCEMAIN AND GRAVITY SEWER

CIVIL
FORCEMAIN PLAN AND PROFILE
STATION 52+00 TO 60+00

0 30' 60'
SCALE: 1"=30'

FILENAME C-02_C-12.DWG
SCALE 1" = 30'

SHEET
C-09

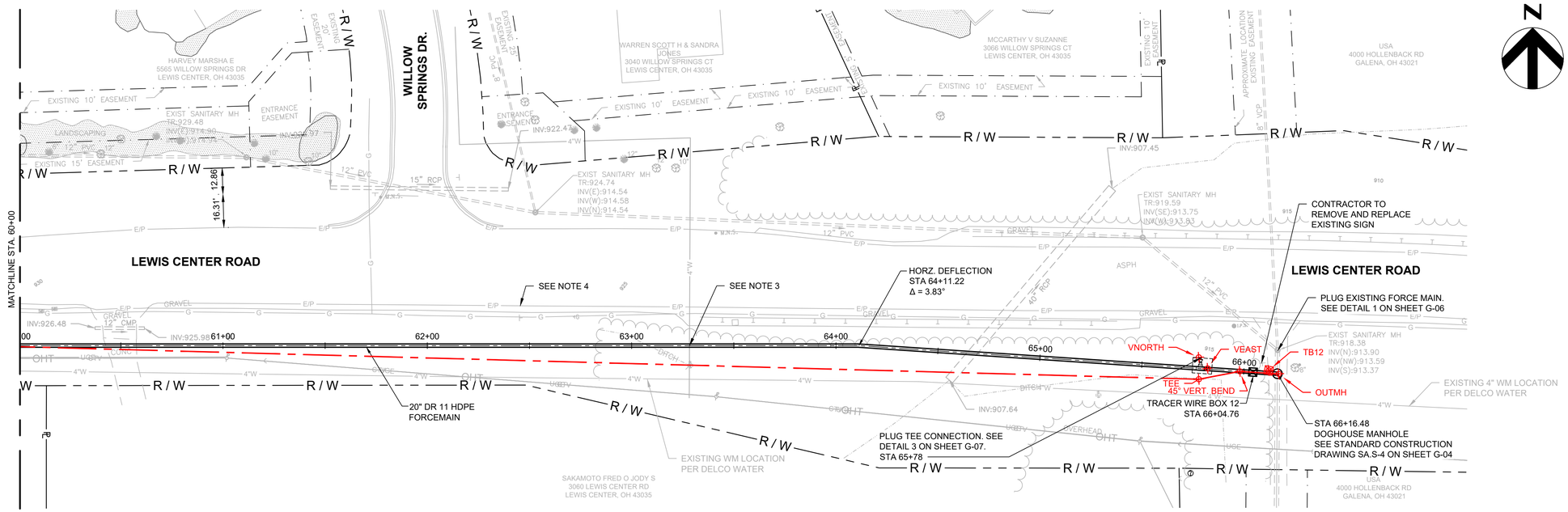

PLAN VIEW

SCALE: 1"=30'

NOTES:

1. COAT DISCHARGE MANHOLE IN ACCORDANCE WITH SPECIFICATION SECTION 09 96 00.
2. CONTRACTOR SHALL FIELD LOCATE AIR RELEASE VALVE AT ACTUAL POINT. LOCATION SHOWN ON PLAN IS APPROXIMATE.
3. THE CONTRACTOR SHALL POTHOLE THE EXISTING 4" WM TO DETERMINE THE EXACT LOCATION AND ELEVATION. THIS INFORMATION SHALL BE GIVEN TO THE DESIGN ENGINEER AND DEL-CO WATER TO DETERMINE IF A CONFLICT EXISTS. IF A CONFLICT EXISTS, THE CONTRACTOR SHALL PROVIDE A RELOCATION PLAN FOR THE WM. TIME EXTENSIONS WILL BE GIVEN, AS NEEDED, HOWEVER DELAY COSTS WILL NOT BE ALLOWED. THE CONTRACTOR SHALL SUPPORT/BRACE THE EX. 4" WM DURING INSTALLATION OF THE 20" FORCEMAIN AS DIRECTED BY DEL-CO WATER'S INSPECTION DEPARTMENT.
4. THE CONTRACTOR SHALL PROTECT THE ADJACENT PAVEMENT FROM DAMAGE DURING CONSTRUCTION.
5. THE PROFILE DEPICTED ON THIS SHEET IS FROM THE ORIGINAL CONTRACT DOCUMENTS AND IS FOR REFERENCE ONLY. AS-BUILT CONDITIONS MAY VARY. THE APPROXIMATE LOCATIONS AND ELEVATIONS OF AS-BUILT FEATURES, SUCH AS BENDS AND ARVS, ARE SHOWN BASED ON INFORMATION FURNISHED BY THE CONTRACTOR.

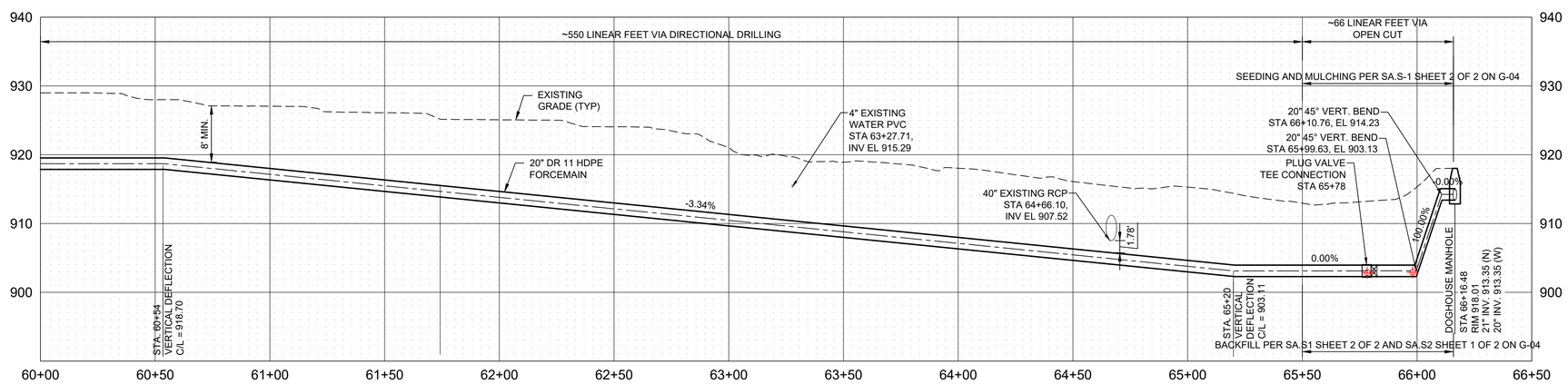

RECORD DOCUMENT

THE ORIGINAL CONTRACT DOCUMENTS, PREPARED BY HDR (ENGINEER), HAVE BEEN MODIFIED TO INCORPORATE FIELD CHANGES MADE BY THE CONTRACTOR BASED ON AS-BUILT REDLINES PROVIDED BY THE CONTRACTOR AND OTHER DATA ASSOCIATED WITH CHANGES IN THE WORK AUTHORIZED BY THE CLIENT. THE ENGINEER REPRESENTS THAT THESE RECORD DRAWINGS HAVE BEEN PREPARED ON THE BASIS OF THIS INFORMATION PROVIDED TO THE ENGINEER, BUT MAKES NO REPRESENTATIONS AS TO THE ACCURACY OR COMPLETENESS OF SUCH INFORMATION.

ISSUE	DATE	DESCRIPTION
	02-07-2024	AS-BUILT

PROJECT MANAGER	KYLE SCHWIETERMAN
DESIGN BY	LCT
DRAWN BY	VKN
APPROVED BY	DLM
PROJECT NUMBER	10062733

DELAWARE COUNTY REGIONAL SEWER DISTRICT
50 CHANNING STREET, DELAWARE, OHIO 43015

PEACHBLOW PUMP STATION AND FORCEMAIN UPGRADE PROJECT

FORCEMAIN AND GRAVITY SEWER

CIVIL
FORCEMAIN PLAN AND PROFILE
STATION 60+00 TO 66+16.48

0 30' 60'
SCALE: 1"=30'

FILENAME: C-02_C-12.DWG
SCALE: 1" = 30'

SHEET
C-10

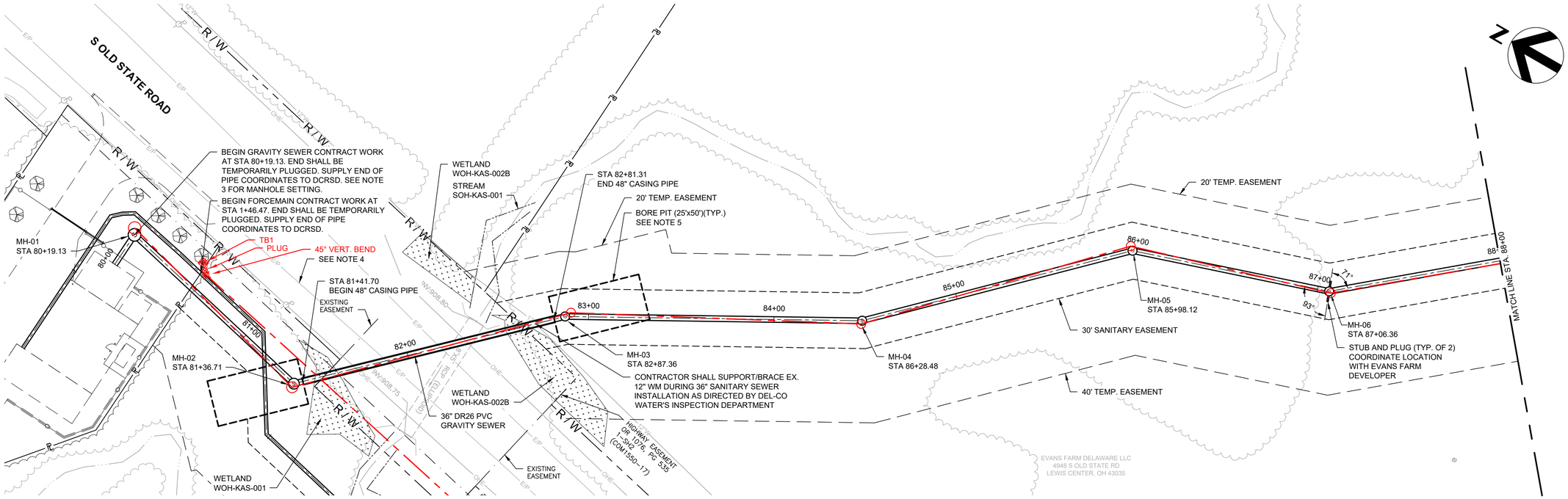

PLAN VIEW

SCALE: 1"=30'

NOTES:

1. THE EXISTING PUMP STATION AND INFLUENT SEWER SHALL REMAIN IN PLACE AND OPERATIONAL UNTIL THE NEW PUMP STATION, FORCEMAIN, AND GRAVITY SEWER ARE CONSTRUCTED, TESTED, AND APPROVED.
2. ALL BORING PITS ARE SHOWN CONCEPTUALLY. ACTUAL LOCATIONS OF BORE PITS MAY REQUIRE EXISTING UTILITIES TO BE RELOCATED AT NO ADDITIONAL COST TO THE SANITARY ENGINEER.
3. FORCEMAIN AND GRAVITY SEWER CONTRACTOR SHALL PLACE MANHOLE CASTINGS AT THE ELEVATION AND STATION WITH OFFSET TO THE CENTER OF THE CASTING OR AS DIRECTED BY THE SANITARY ENGINEER. PLACE THE MANHOLE BASE AT THE ELEVATION AND STATION WITH OFFSET TO AGREE WITH THE PIPE STATION, OFFSET AND PIPE INVERT ELEVATION ACCORDING TO THE CONTRACT DOCUMENTS OR AS DIRECTED BY THE SANITARY ENGINEER.
4. THE CONTRACTOR SHALL PROTECT THE ADJACENT PAVEMENT FROM DAMAGE DURING CONSTRUCTION.
5. PROVIDE BORE PIT PROTECTION. REFER TO DETAIL 1 ON SHEET G-07.
6. THE CONTRACTOR SHALL PROVIDE COMPACTION PER ODOT ITEM 304 FOR THE SHOWN ZONE OF INFLUENCE. PROVIDE DENSITY TESTING.
7. THE CONTRACTOR SHALL PROVIDE COMPACTION PER ODOT ITEM 203 FROM STA 87+24 TO 87+89. PROVIDE DENSITY TESTING.
8. ZONE OF INFLUENCE FOR FUTURE PUBLIC ROAD.

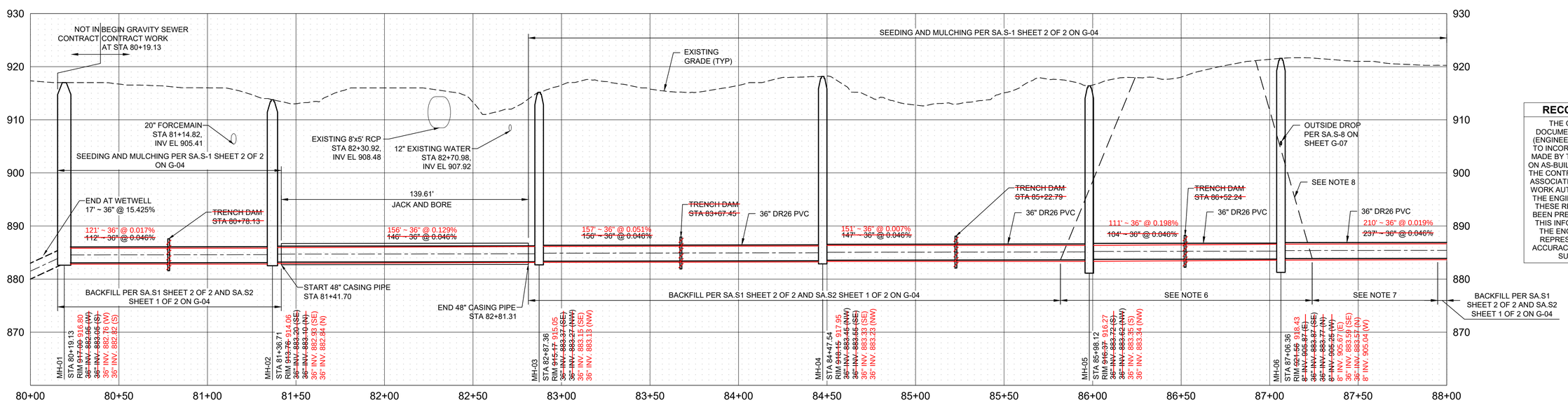

RECORD DOCUMENT

THE ORIGINAL CONTRACT DOCUMENTS, PREPARED BY HDR (ENGINEER), HAVE BEEN MODIFIED TO INCORPORATE FIELD CHANGES MADE BY THE CONTRACTOR BASED ON AS-BUILT REDLINES PROVIDED BY THE CONTRACTOR AND OTHER DATA ASSOCIATED WITH CHANGES IN THE WORK AUTHORIZED BY THE CLIENT. THE ENGINEER REPRESENTS THAT THESE RECORD DRAWINGS HAVE BEEN PREPARED ON THE BASIS OF THIS INFORMATION PROVIDED TO THE ENGINEER, BUT MAKES NO REPRESENTATIONS AS TO THE ACCURACY OR COMPLETENESS OF SUCH INFORMATION.

ISSUE	DATE	DESCRIPTION
	02-07-2024	AS-BUILT

PROJECT MANAGER	KYLE SCHWIETERMAN
DESIGN BY	LCT
DRAWN BY	VKN
APPROVED BY	MJR
PROJECT NUMBER	10062733

DELAWARE COUNTY REGIONAL SEWER DISTRICT
50 CHANNING STREET, DELAWARE, OHIO 43015

PEACHBLOW PUMP STATION AND FORCEMAIN UPGRADE PROJECT

FORCEMAIN AND GRAVITY SEWER

CIVIL
SEWER PLAN AND PROFILE
STATION 80+00 TO 88+00

0 30' 60'
SCALE: 1"=30'

FILENAME C-02_C-12.DWG
SCALE 1" = 30'

SHEET
C-11

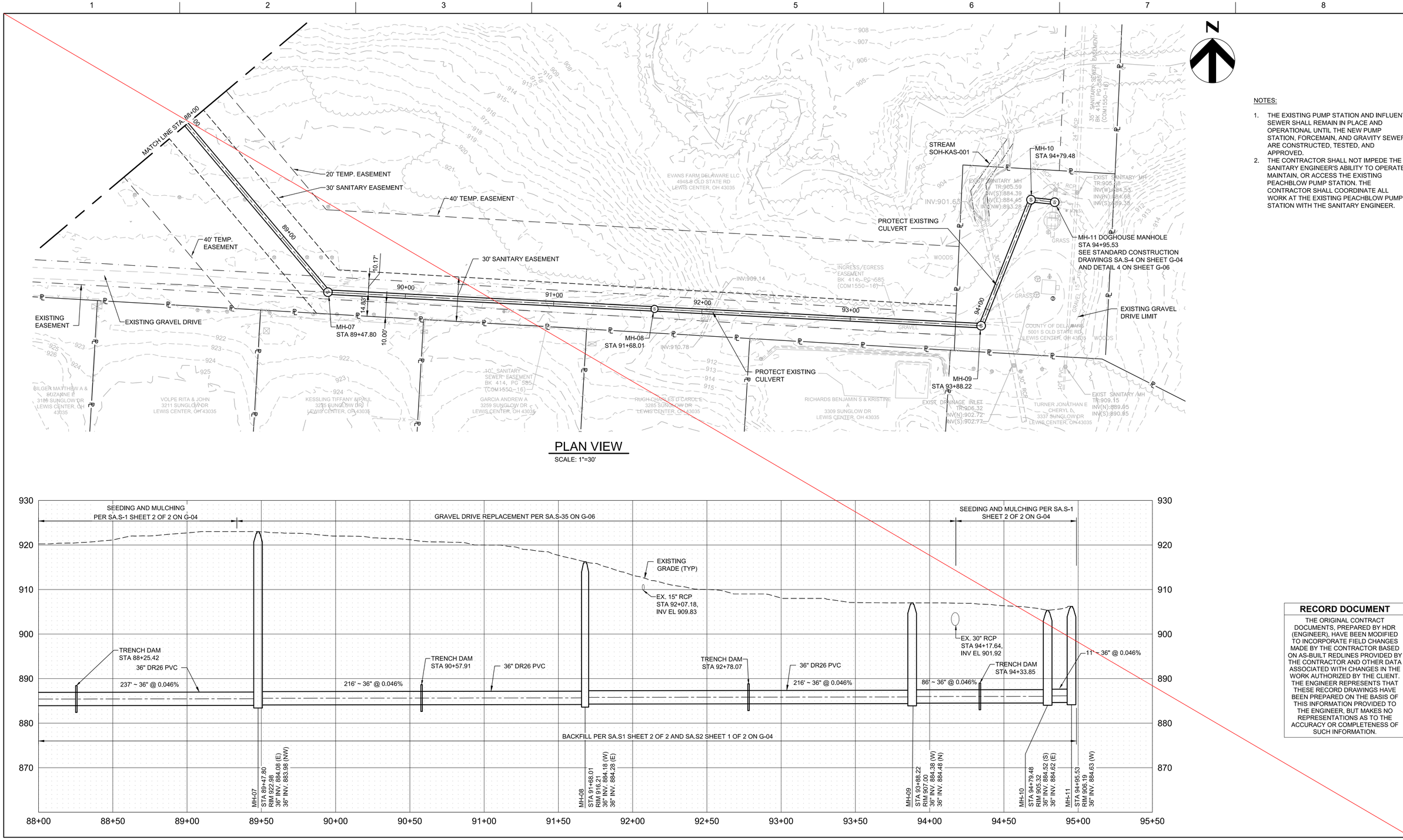

NOTES:

1. THE EXISTING PUMP STATION AND INFLUENT SEWER SHALL REMAIN IN PLACE AND OPERATIONAL UNTIL THE NEW PUMP STATION, FORCEMAIN, AND GRAVITY SEWER ARE CONSTRUCTED, TESTED, AND APPROVED.
2. THE CONTRACTOR SHALL NOT IMPEDE THE SANITARY ENGINEER'S ABILITY TO OPERATE, MAINTAIN, OR ACCESS THE EXISTING PEACHBLOW PUMP STATION. THE CONTRACTOR SHALL COORDINATE ALL WORK AT THE EXISTING PEACHBLOW PUMP STATION WITH THE SANITARY ENGINEER.

RECORD DOCUMENT

THE ORIGINAL CONTRACT DOCUMENTS, PREPARED BY HDR (ENGINEER), HAVE BEEN MODIFIED TO INCORPORATE FIELD CHANGES MADE BY THE CONTRACTOR BASED ON AS-BUILT REDLINES PROVIDED BY THE CONTRACTOR AND OTHER DATA ASSOCIATED WITH CHANGES IN THE WORK AUTHORIZED BY THE CLIENT. THE ENGINEER REPRESENTS THAT THESE RECORD DRAWINGS HAVE BEEN PREPARED ON THE BASIS OF THIS INFORMATION PROVIDED TO THE ENGINEER, BUT MAKES NO REPRESENTATIONS AS TO THE ACCURACY OR COMPLETENESS OF SUCH INFORMATION.

ISSUE	DATE	DESCRIPTION
	02-07-2024	AS-BUILT

PROJECT MANAGER	KYLE SCHWIETERMAN
DESIGN BY	LCT
DRAWN BY	VKN
APPROVED BY	MJR
PROJECT NUMBER	10062733

DELAWARE COUNTY REGIONAL SEWER DISTRICT
50 CHANNING STREET, DELAWARE, OHIO 43015

PEACHBLOW PUMP STATION AND FORCEMAIN UPGRADE PROJECT

FORCEMAIN AND GRAVITY SEWER

CIVIL
SEWER PLAN AND PROFILE
STATION 88+00 TO END

0 30' 60'
SCALE: 1"=30'

FILENAME C-02_C-12.DWG
SCALE 1" = 30'

SHEET
C-12

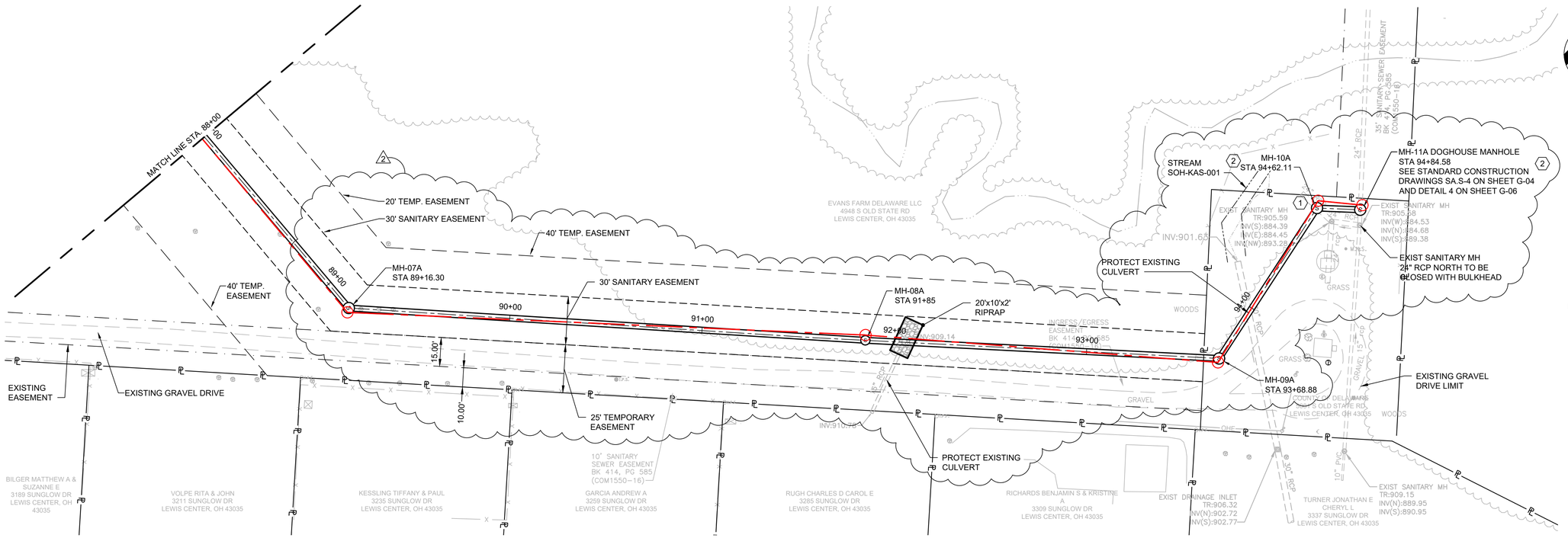

PLAN VIEW

SCALE: 1"=30'

NOTES:

1. THE EXISTING PUMP STATION AND INFLUENT SEWER SHALL REMAIN IN PLACE AND OPERATIONAL UNTIL THE NEW PUMP STATION, FORCEMAIN, AND GRAVITY SEWER ARE CONSTRUCTED, TESTED, AND APPROVED.
2. THE CONTRACTOR SHALL NOT IMPEDE THE SANITARY ENGINEER'S ABILITY TO OPERATE, MAINTAIN, OR ACCESS THE EXISTING PEACHBLOW PUMP STATION. THE CONTRACTOR SHALL COORDINATE ALL WORK AT THE EXISTING PEACHBLOW PUMP STATION WITH THE SANITARY ENGINEER.

CODED NOTES:

1. RECORD PLANS SHOW 24" RCP THAT RUNS NORTHWEST AND SOUTHEAST AT THIS LOCATION. FIELD INVESTIGATIONS HAVE VERIFIED THIS PIPE HAS NOT BEEN INSTALLED.
2. CONTRACTOR SHALL FIELD VERIFY FINAL INVERTS FOR MH10A AND MH11A.

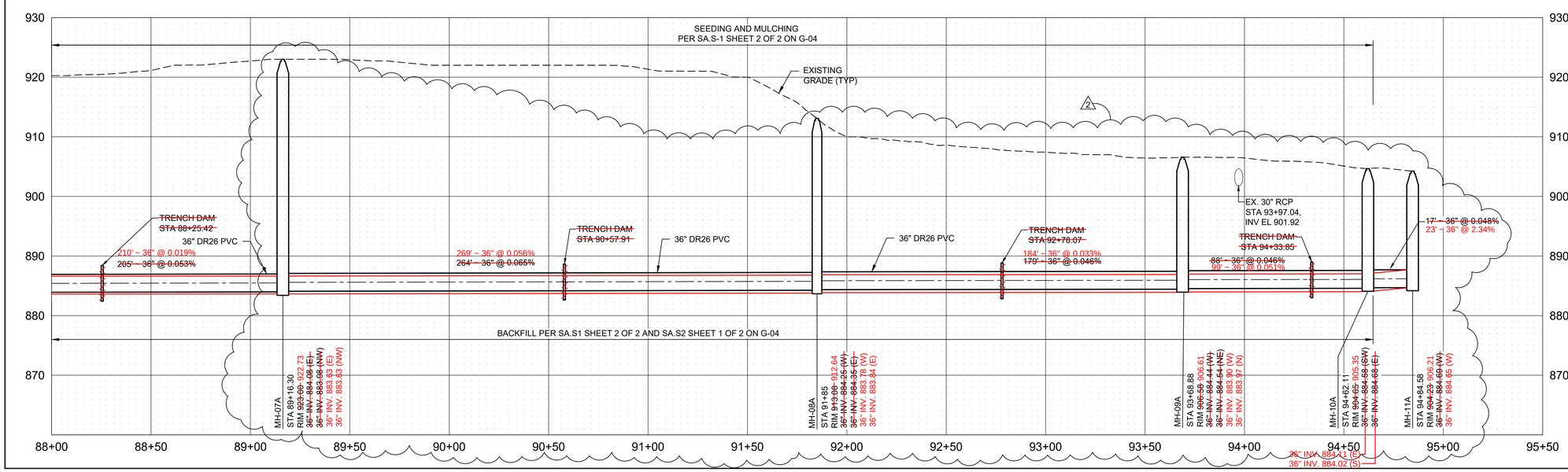

RECORD DOCUMENT

THE ORIGINAL CONTRACT DOCUMENTS, PREPARED BY HDR (ENGINEER), HAVE BEEN MODIFIED TO INCORPORATE FIELD CHANGES MADE BY THE CONTRACTOR BASED ON AS-BUILT REDLINES PROVIDED BY THE CONTRACTOR AND OTHER DATA ASSOCIATED WITH CHANGES IN THE WORK AUTHORIZED BY THE CLIENT. THE ENGINEER REPRESENTS THAT THESE RECORD DRAWINGS HAVE BEEN PREPARED ON THE BASIS OF THIS INFORMATION PROVIDED TO THE ENGINEER, BUT MAKES NO REPRESENTATIONS AS TO THE ACCURACY OR COMPLETENESS OF SUCH INFORMATION.

ISSUE	DATE	DESCRIPTION
	02-07-2024	AS-BUILT
C	04-13-2021	ISSUED FOR CONSTRUCTION
B	01-12-2020	ADDENDUM
A	08-31-2020	ISSUED FOR BID

PROJECT MANAGER	KYLE SCHWIETERMAN
DESIGN BY	LCT
DRAWN BY	VKN
APPROVED BY	MJR
PROJECT NUMBER	10062733

DELAWARE COUNTY REGIONAL SEWER DISTRICT
50 CHANNING STREET, DELAWARE, OHIO 43015

PEACHBLOW PUMP STATION AND FORCEMAIN UPGRADE PROJECT

FORCEMAIN AND GRAVITY SEWER

CIVIL
SEWER PLAN AND PROFILE
STATION 88+00 TO END

0 30' 60'
SCALE: 1"=30'

FILENAME ALT C-02-C-12.DWG
SCALE 1" = 30'

SHEET
C-12A

MANHOLE TABLE

NAME	INSIDE DIAMETER (IN.)	STATION	NORTHING	EASTING	DETAILS
DOGHOUSE MANHOLE	48.000	FORCEMAIN ALIGNMENT 66+16.48	193923.9021	1833619.2197	RIM EL 918.01 INV IN = 913.35 (N) INV IN = 913.35 (W)
MH-01	72.000	GRAVITY SEWER 80+19.13	198421.0777	1832573.7704	RIM EL 917.00 TYPE C INV IN = 883.05 (S) INV OUT = 882.95 (W)
MH-02	60.000	GRAVITY SEWER 81+36.71	198306.5326	1832547.2131	RIM EL 913.76 TYPE B INV IN = 883.20 (SE) INV OUT = 883.10 (N)
MH-03	48.000	GRAVITY SEWER 82+87.36	198197.9994	1832651.6983	RIM EL 915.17 TYPE A INV IN = 883.37 (SE) INV OUT = 883.27 (NW)
MH-04	48.000	GRAVITY SEWER 84+47.54	198058.1585	1832729.8022	RIM EL 918.15 TYPE A INV IN = 883.55 (SE) INV OUT = 883.45 (NW)
MH-05	48.000	GRAVITY SEWER 85+98.12	197950.8169	1832835.4083	RIM EL 916.37 TYPE A INV IN = 883.72 (S) INV OUT = 883.62 (NW)
MH-06	48.000	GRAVITY SEWER 87+06.36	197848.0410	1832869.3856	RIM EL 921.56 TYPE A INV IN = 905.87 (E) INV IN = 883.87 (SE) INV IN = 905.25 (W) INV OUT = 883.77 (N)
MH-07	60.000	GRAVITY SEWER 89+47.80	197663.4913	1833025.0605	RIM EL 922.98 TYPE B INV IN = 884.08 (E) INV OUT = 883.98 (NW)
MH-08	48.000	GRAVITY SEWER 91+68.01	197652.2020	1833244.9787	RIM EL 916.21 TYPE A INV IN = 884.28 (E) INV OUT = 884.18 (W)
MH-09	60.000	GRAVITY SEWER 93+88.22	197640.9127	1833464.8969	RIM EL 907.00 TYPE B INV IN = 884.48 (N) INV OUT = 884.38 (W)
MH-10	60.000	GRAVITY SEWER 94+79.48	197725.7696	1833498.4764	RIM EL 905.32 TYPE B INV IN = 884.62 (E) INV OUT = 884.52 (S)
MH-11	60.000	GRAVITY SEWER 94+95.53	197724.0742	1833514.4407	RIM EL 906.19 TYPE B INV OUT = 884.63 (W)
ARV-01	60.000	FORCE MAIN ALIGNMENT 11+65.62	197430.0293	1832346.0464	RIM EL 928.33 FORCEMAIN AIR RELEASE VALVE - 3 INCH (VENT-O-MAT 080RGX1031S4)
ARV-02	60.000	FORCE MAIN ALIGNMENT 25+83.92	196055.8892	1832014.0780	RIM EL 936.33 FORCEMAIN AIR RELEASE VALVE - 3 INCH (VENT-O-MAT 080RGX1031S4)
ARV-03	60.000	FORCE MAIN ALIGNMENT 46+76.92	194147.4998	1831764.8160	RIM EL 938.51 FORCEMAIN AIR RELEASE VALVE - 3 INCH (VENT-O-MAT 080RGX1031S4)

FORCEMAIN ALIGNMENT

NUMBER	START STATION	END STATION	LENGTH	DIRECTION	NORTHING	EASTING
L-1 (BY OTHERS)	0+00	0+06.00	6.00'	S86°16'38"E	198442.6757	1832490.8728
L-2 (BY OTHERS)	0+06	0+30.24	24.24'	S86°16'38"E	198442.2861	1832496.8601
L-3 (BY OTHERS)	0+30.24	0+85.31	55.06'	S86°16'38"E	198440.7120	1832521.0526
L-4 (BY OTHERS)	0+85.31	0+91.87	6.57'	S42°50'16"E	198437.1368	1832576.0001
L-5 (BY OTHERS)	0+91.87	0+98.44	6.57'	S31°35'16"E	198432.3222	1832580.4643
L-6 (BY OTHERS)	0+98.44	1+31.54	33.10'	S11°50'57"W	198426.7290	1832583.9037
L-7 (BY OTHERS)	1+31.54	1+46.47	14.92'	S13°16'09"W	198394.3294	1832577.1061
L-8	1+46.47	1+92.94	46.48'	S13°16'09"W	198379.8064	1832573.6812
L-9	1+92.94	2+47.97	55.03'	S58°15'53"W	198334.5719	1832563.0138
L-10	2+47.97	3+31.77	83.80'	S13°16'09"W	198305.6243	1832516.2084
L-11	3+31.77	4+02.26	70.49'	S31°43'51"E	198224.0633	1832496.9743
L-12	4+02.26	4+50.00	47.74'	S13°16'09"W	198164.1114	1832534.0458
L-13	4+50	8+35.73	385.73'	S13°16'09"W	198117.6468	1832523.0883
L-14	8+35.73	8+56.92	21.19'	S56°24'36"W	197742.2113	1832434.5515
L-15	8+56.92	14+73.34	616.42'	S13°16'09"W	197730.4885	1832416.9006
L-16	14+73.34	14+88.17	14.83'	S58°16'09"W	197130.5273	1832275.4153
L-17	14+88.17	19+28.13	439.95'	S13°16'09"W	197122.7259	1832262.7989
L-18	19+28.13	25+83.62	655.49'	S13°01'32"W	196694.5174	1832161.8170
L-19	25+83.62	26+59.84	76.21'	S13°01'32"W	196055.8892	1832014.0780
L-20	26+59.84	26+84.99	25.15'	S18°01'32"W	195981.6380	1831996.9008
L-21	26+84.99	30+31.69	346.70'	S13°16'09"W	195957.7214	1831989.1181
L-22	30+31.69	30+77.43	45.74'	S31°43'55"E	195620.2738	1831909.5398
L-23	30+77.43	31+45.29	67.86'	S13°19'05"W	195581.3725	1831933.5957
L-24	31+45.29	32+45.78	100.49'	S13°52'10"W	195515.3370	1831917.9637
L-25	32+45.78	36+11.00	365.22'	S13°46'56"W	195417.7780	1831893.8755
L-26	36+11	36+26.00	15.00'	S13°19'11"W	195063.0707	1831806.8677
L-27	36+26	36+96.95	70.95'	S76°40'49"E	195048.4742	1831803.4119
L-28	36+96.95	43+92.07	695.12'	S13°19'11"W	195032.1284	1831872.4537
L-29	43+92.07	45+17.31	125.24'	S16°39'05"W	194355.7105	1831712.3103
L-30	45+17.31	45+52.31	35.00'	S13°40'38"W	194235.7214	1831676.4230
L-31	45+52.31	46+09.43	57.12'	S31°19'22"E	194201.7139	1831668.1471
L-32	46+09.43	46+76.62	67.19'	S85°22'33"E	194152.9168	1831697.8426
L-33	46+76.62	51+15.43	438.81'	S85°22'33"E	194147.4998	1831764.8160
L-34	51+15.43	53+99.42	283.98'	S84°25'50"E	194112.1231	1832202.1987
L-35	53+99.42	58+56.02	456.60'	S86°20'44"E	194084.5618	1832484.8430
L-36	58+56.02	59+30.32	74.30'	S3°39'13"W	194055.4577	1832940.5187
L-37	59+30.32	64+10.95	480.63'	S86°20'47"E	193981.3126	1832935.7841
L-38	64+10.95	65+50.62	139.68'	S82°30'46"E	193950.6847	1833415.4352
L-39	65+50.62	65+99.37	48.74'	S82°30'46"E	193932.4842	1833553.9202
L-40	65+99.37	66+10.48	11.12'	S82°30'46"E	193926.1326	1833602.2485
L-41	66+10.48	66+16.48	6.00'	S82°30'46"E	193924.6841	1833613.2698

FORCEMAIN FITTINGS

NAME	TYPE	STATION	NORTHING	EASTING
F-1 (BY OTHERS)	22.5° HORZ. BEND	FORCEMAIN ALIGNMENT 0+06.00	198442.2861	1832496.8601
F-2 (BY OTHERS)	22.5° HORZ. BEND	FORCEMAIN ALIGNMENT 0+30.24	198440.7120	1832521.0526
F-3 (BY OTHERS)	45° HORZ. BEND	FORCEMAIN ALIGNMENT 0+85.39	198437.1291	1832576.1181
F-4 (BY OTHERS)	11.25° HORZ. BEND	FORCEMAIN ALIGNMENT 0+91.87	198432.3222	1832580.4643
F-5 (BY OTHERS)	45° HORZ. BEND	FORCEMAIN ALIGNMENT 0+98.44	198426.7290	1832583.9037
F-6	45° HORZ. BEND	FORCEMAIN ALIGNMENT 1+92.94	198334.5719	1832563.0138
F-7	45° HORZ. BEND	FORCEMAIN ALIGNMENT 2+47.97	198305.6243	1832516.2084
F-8	45° HORZ. BEND	FORCEMAIN ALIGNMENT 3+31.77	198224.0633	1832496.9743
F-9	45° HORZ. BEND	FORCEMAIN ALIGNMENT 4+02.26	198164.1114	1832534.0458
F-10	45° HORZ. BEND	FORCEMAIN ALIGNMENT 8+35.73	197742.2113	1832434.5515
F-11	45° HORZ. BEND	FORCEMAIN ALIGNMENT 8+56.21	197731.4348	1832417.1238
F-12	45° HORZ. BEND	FORCEMAIN ALIGNMENT 14+73.34	197130.5273	1832275.4153
F-13	45° HORZ. BEND	FORCEMAIN ALIGNMENT 14+88.17	197122.7259	1832262.7989
F-14	45° HORZ. BEND	FORCEMAIN ALIGNMENT 30+31.69	195620.2738	1831909.5398
F-15	45° HORZ. BEND	FORCEMAIN ALIGNMENT 30+77.43	195581.3725	1831933.5957
F-16	90° HORZ. BEND	FORCEMAIN ALIGNMENT 36+26.00	195048.4742	1831803.4119
F-17	90° HORZ. BEND	FORCEMAIN ALIGNMENT 36+96.95	195032.1284	1831872.4537
F-18	45° HORZ. BEND	FORCEMAIN ALIGNMENT 45+52.31	194201.7139	1831668.1471
F-19	45° HORZ. BEND	FORCEMAIN ALIGNMENT 46+09.43	194152.9168	1831697.8426
F-20	90° HORZ. BEND	FORCEMAIN ALIGNMENT 58+56.02	194055.4577	1832940.5187
F-21	90° HORZ. BEND	FORCEMAIN ALIGNMENT 59+30.32	193981.3126	1832935.7841
F-22	20" TEE	FORCEMAIN ALIGNMENT 65+78.62	193928.8358	1833581.6805
F-23	20" PLUG VALVE	FORCEMAIN ALIGNMENT 65+81.89	193928.4106	1833584.9155
F-24	45° VERT. BEND	FORCEMAIN ALIGNMENT 65+99.37	193926.1326	1833602.2485
F-25	45° VERT. BEND	FORCEMAIN ALIGNMENT 66+10.48	193924.6841	1833613.2698

STRUCTURE TABLE

NAME	STATION	NORTHING	EASTING	RIM EL
TRACER WIRE BOX 1	FORCEMAIN ALIGNMENT 5+00.00	198068.9814	1832511.6118	915.64
TRACER WIRE BOX 2	FORCEMAIN ALIGNMENT 11+59.62	197435.8683	1832347.4253	928.00
TRACER WIRE BOX 3	FORCEMAIN ALIGNMENT 16+59.72	196955.7569	1832223.4248	931.89
TRACER WIRE BOX 4	FORCEMAIN ALIGNMENT 21+89.73	196439.6499	1832102.8564	934.39
TRACER WIRE BOX 5	FORCEMAIN ALIGNMENT 25+77.62	196061.7348	1832015.4303	936.00
TRACER WIRE BOX 6	FORCEMAIN ALIGNMENT 30+67.43	195589.8776	1831928.3363	929.04
TRACER WIRE BOX 7	FORCEMAIN ALIGNMENT 35+83.62	195089.6600	1831813.3899	922.88
TRACER WIRE BOX 8	FORCEMAIN ALIGNMENT 43+34.62	194411.6110	1831725.5393	936.99
TRACER WIRE BOX 9	FORCEMAIN ALIGNMENT 48+40.62	194134.2782	1831928.2822	937.16
TRACER WIRE BOX 10	FORCEMAIN ALIGNMENT 53+40.62	194090.2681	1832426.3246	934.01
TRACER WIRE BOX 11	FORCEMAIN ALIGNMENT 58+40.62	194056.4392	1832925.1499	928.06
TRACER WIRE BOX 12	FORCEMAIN ALIGNMENT 66+04.48	193925.4659	1833607.3210	916.69

RECORD DOCUMENT

THE ORIGINAL CONTRACT DOCUMENTS, PREPARED BY HDR (ENGINEER), HAVE BEEN MODIFIED TO INCORPORATE FIELD CHANGES MADE BY THE CONTRACTOR BASED ON AS-BUILT REDLINES PROVIDED BY THE CONTRACTOR AND OTHER DATA ASSOCIATED WITH CHANGES IN THE WORK AUTHORIZED BY THE CLIENT. THE ENGINEER REPRESENTS THAT THESE RECORD DRAWINGS HAVE BEEN PREPARED ON THE BASIS OF THIS INFORMATION PROVIDED TO THE ENGINEER, BUT MAKES NO REPRESENTATIONS AS TO THE ACCURACY OR COMPLETENESS OF SUCH INFORMATION.

ISSUE	DATE	DESCRIPTION
	02-07-2024	AS-BUILT

PROJECT MANAGER	KYLE SCHWIETERMAN
DESIGN BY	LCT
DRAWN BY	VKN
APPROVED BY	DLM
PROJECT NUMBER	10062733

DELAWARE COUNTY REGIONAL SEWER DISTRICT
50 CHANNING STREET, DELAWARE, OHIO 43015

PEACHBLOW PUMP STATION AND FORCEMAIN UPGRADE PROJECT

FORCEMAIN AND GRAVITY SEWER

CIVIL

TABLES

0 30' 60'
SCALE: 1"=30'

FILENAME C-13.DWG
SCALE NOT TO SCALE

SHEET C-13

MANHOLE TABLE

NAME	INSIDE DIAMETER (IN.)	STATION	NORTHING	EASTING	DETAILS
DOGHOUSE MANHOLE	48.000	FORCEMAIN ALIGNMENT 66+16.48	193923.9021	1833619.2197	RIM EL 918.01 INV IN = 913.35 (N) INV IN = 913.35 (W)
MH-01	72.000	GRAVITY SEWER 80+19.13	198421.0777	1832573.7704	RIM EL 917.00 TYPE C INV IN = 883.05 (S) INV OUT = 882.95 (W)
MH-02	60.000	GRAVITY SEWER 81+36.71	198306.5326	1832547.2131	RIM EL 913.76 TYPE B INV IN = 883.20 (SE) INV OUT = 883.10 (N)
MH-03	48.000	GRAVITY SEWER 82+87.36	198197.9994	1832651.6983	RIM EL 915.17 TYPE A INV IN = 883.37 (SE) INV OUT = 883.27 (NW)
MH-04	48.000	GRAVITY SEWER 84+47.54	198058.1585	1832729.8022	RIM EL 918.15 TYPE A INV IN = 883.55 (SE) INV OUT = 883.45 (NW)
MH-05	48.000	GRAVITY SEWER 85+98.12	197950.8169	1832835.4083	RIM EL 916.37 TYPE A INV IN = 883.72 (S) INV OUT = 883.62 (NW)
MH-06	48.000	GRAVITY SEWER 87+06.36	197848.0410	1832869.3856	RIM EL 921.56 TYPE A INV IN = 905.87 (E) INV IN = 883.87 (SE) INV IN = 905.25 (W) INV OUT = 883.77 (N)
MH-07A	60.000	GRAVITY SEWER 89+16.30	197687.5693	1833004.7498	RIM EL 923.00 TYPE B INV IN = 884.08 (E) INV OUT = 883.98 (NW)
MH-08A	48.000	GRAVITY SEWER 91+85.00	197670.7940	1833272.9207	RIM EL 913.08 TYPE A INV IN = 884.35 (E) INV OUT = 884.25 (W)
MH-09A	60.000	GRAVITY SEWER 93+68.88	197661.3672	1833456.5556	RIM EL 906.58 TYPE B INV IN = 884.54 (NE) INV OUT = 884.44 (W)
MH-10A	60.000	GRAVITY SEWER 94+62.11	197739.5031	1833507.4158	RIM EL 904.65 TYPE B INV IN = 884.68 (E) INV OUT = 884.58 (SW)
MH-11A	60.000	GRAVITY SEWER 94+84.58	197738.6114	1833529.8715	RIM EL 904.23 TYPE B INV OUT = 884.69 (W)
ARV-01	60.000	FORCE MAIN ALIGNMENT 11+65.62	197430.0293	1832346.0464	RIM EL 928.33 FORCEMAIN AIR RELEASE VALVE - 3 INCH (VENT-O-MAT 080RGX1031S4)
ARV-02	60.000	FORCE MAIN ALIGNMENT 25+83.92	196055.8892	1832014.0780	RIM EL 936.33 FORCEMAIN AIR RELEASE VALVE - 3 INCH (VENT-O-MAT 080RGX1031S4)
ARV-03	60.000	FORCE MAIN ALIGNMENT 46+76.92	194147.4998	1831764.8160	RIM EL 938.51 FORCEMAIN AIR RELEASE VALVE - 3 INCH (VENT-O-MAT 080RGX1031S4)

2

FORCEMAIN ALIGNMENT

NUMBER	START STATION	END STATION	LENGTH	DIRECTION	NORTHING	EASTING
L-1 (BY OTHERS)	0+00	0+06.00	6.00'	S86°16'38"E	198442.6757	1832490.8728
L-2 (BY OTHERS)	0+06	0+30.24	24.24'	S86°16'38"E	198442.2861	1832496.8601
L-3 (BY OTHERS)	0+30.24	0+85.31	55.06'	S86°16'38"E	198440.7120	1832521.0526
L-4 (BY OTHERS)	0+85.31	0+91.87	6.57'	S42°50'16"E	198437.1368	1832576.0001
L-5 (BY OTHERS)	0+91.87	0+98.44	6.57'	S31°35'16"E	198432.3222	1832580.4643
L-6 (BY OTHERS)	0+98.44	1+31.54	33.10'	S11°50'57"W	198426.7290	1832583.9037
L-7 (BY OTHERS)	1+31.54	1+46.47	14.92'	S13°16'09"W	198394.3294	1832577.1061
L-8	1+46.47	1+92.94	46.48'	S13°16'09"W	198379.8064	1832573.6812
L-9	1+92.94	2+47.97	55.03'	S58°15'53"W	198334.5719	1832563.0138
L-10	2+47.97	3+31.77	83.80'	S13°16'09"W	198305.6243	1832516.2084
L-11	3+31.77	4+02.26	70.49'	S31°43'51"E	198224.0633	1832496.9743
L-12	4+02.26	4+50.00	47.74'	S13°16'09"W	198164.1114	1832534.0458
L-13	4+50	8+35.73	385.73'	S13°16'09"W	198117.6468	1832523.0883
L-14	8+35.73	8+56.92	21.19'	S56°24'36"W	197742.2113	1832434.5515
L-15	8+56.92	14+73.34	616.42'	S13°16'09"W	197730.4885	1832416.9006
L-16	14+73.34	14+88.17	14.83'	S58°16'09"W	197130.5273	1832275.4153
L-17	14+88.17	19+28.13	439.95'	S13°16'09"W	197122.7259	1832262.7989
L-18	19+28.13	25+83.62	655.49'	S13°01'32"W	196694.5174	1832161.8170
L-19	25+83.62	26+59.84	76.21'	S13°01'32"W	196055.8892	1832014.0780
L-20	26+59.84	26+84.99	25.15'	S18°01'32"W	195981.6380	1831996.9008
L-21	26+84.99	30+31.69	346.70'	S13°16'09"W	195957.7214	1831989.1181
L-22	30+31.69	30+77.43	45.74'	S31°43'55"E	195620.2738	1831909.5398
L-23	30+77.43	31+45.29	67.86'	S13°19'05"W	195581.3725	1831933.5957
L-24	31+45.29	32+45.78	100.49'	S13°52'10"W	195515.3370	1831917.9637
L-25	32+45.78	36+11.00	365.22'	S13°46'56"W	195417.7780	1831893.8755
L-26	36+11	36+26.00	15.00'	S13°19'11"W	195063.0707	1831806.8677
L-27	36+26	36+96.95	70.95'	S76°40'49"E	195048.4742	1831803.4119
L-28	36+96.95	43+92.07	695.12'	S13°19'11"W	195032.1284	1831872.4537
L-29	43+92.07	45+17.31	125.24'	S16°39'05"W	194355.7105	1831712.3103
L-30	45+17.31	45+52.31	35.00'	S13°40'38"W	194235.7214	1831676.4230
L-31	45+52.31	46+09.43	57.12'	S31°19'22"E	194201.7139	1831668.1471
L-32	46+09.43	46+76.62	67.19'	S85°22'33"E	194152.9168	1831697.8426
L-33	46+76.62	51+15.43	438.81'	S85°22'33"E	194147.4998	1831764.8160
L-34	51+15.43	53+99.42	283.98'	S84°25'50"E	194112.1231	1832202.1987
L-35	53+99.42	58+56.02	456.60'	S86°20'44"E	194084.5618	1832484.8430
L-36	58+56.02	59+30.32	74.30'	S3°39'13"W	194055.4577	1832940.5187
L-37	59+30.32	64+10.95	480.63'	S86°20'47"E	193981.3126	1832935.7841
L-38	64+10.95	65+50.62	139.68'	S82°30'46"E	193950.6847	1833415.4352
L-39	65+50.62	65+99.37	48.74'	S82°30'46"E	193932.4842	1833553.9202
L-40	65+99.37	66+10.48	11.12'	S82°30'46"E	193926.1326	1833602.2485
L-41	66+10.48	66+16.48	6.00'	S82°30'46"E	193924.6841	1833613.2698

FORCEMAIN FITTINGS

NAME	TYPE	STATION	NORTHING	EASTING
F-1 (BY OTHERS)	22.5° HORZ. BEND	FORCEMAIN ALIGNMENT 0+06.00	198442.2861	1832496.8601
F-2 (BY OTHERS)	22.5° HORZ. BEND	FORCEMAIN ALIGNMENT 0+30.24	198440.7120	1832521.0526
F-3 (BY OTHERS)	45° HORZ. BEND	FORCEMAIN ALIGNMENT 0+85.39	198437.1291	1832576.1181
F-4 (BY OTHERS)	11.25° HORZ. BEND	FORCEMAIN ALIGNMENT 0+91.87	198432.3222	1832580.4643
F-5 (BY OTHERS)	45° HORZ. BEND	FORCEMAIN ALIGNMENT 0+98.44	198426.7290	1832583.9037
F-6	45° HORZ. BEND	FORCEMAIN ALIGNMENT 1+92.94	198334.5719	1832563.0138
F-7	45° HORZ. BEND	FORCEMAIN ALIGNMENT 2+47.97	198305.6243	1832516.2084
F-8	45° HORZ. BEND	FORCEMAIN ALIGNMENT 3+31.77	198224.0633	1832496.9743
F-9	45° HORZ. BEND	FORCEMAIN ALIGNMENT 4+02.26	198164.1114	1832534.0458
F-10	45° HORZ. BEND	FORCEMAIN ALIGNMENT 8+35.73	197742.2113	1832434.5515
F-11	45° HORZ. BEND	FORCEMAIN ALIGNMENT 8+56.21	197731.4348	1832417.1238
F-12	45° HORZ. BEND	FORCEMAIN ALIGNMENT 14+73.34	197130.5273	1832275.4153
F-13	45° HORZ. BEND	FORCEMAIN ALIGNMENT 14+88.17	197122.7259	1832262.7989
F-14	45° HORZ. BEND	FORCEMAIN ALIGNMENT 30+31.69	195620.2738	1831909.5398
F-15	45° HORZ. BEND	FORCEMAIN ALIGNMENT 30+77.43	195581.3725	1831933.5957
F-16	90° HORZ. BEND	FORCEMAIN ALIGNMENT 36+26.00	195048.4742	1831803.4119
F-17	90° HORZ. BEND	FORCEMAIN ALIGNMENT 36+96.95	195032.1284	1831872.4537
F-18	45° HORZ. BEND	FORCEMAIN ALIGNMENT 45+52.31	194201.7139	1831668.1471
F-19	45° HORZ. BEND	FORCEMAIN ALIGNMENT 46+09.43	194152.9168	1831697.8426
F-20	90° HORZ. BEND	FORCEMAIN ALIGNMENT 58+56.02	194055.4577	1832940.5187
F-21	90° HORZ. BEND	FORCEMAIN ALIGNMENT 59+30.32	193981.3126	1832935.7841
F-22	20" TEE	FORCEMAIN ALIGNMENT 65+78.62	193928.8358	1833581.6805
F-23	20" PLUG VALVE	FORCEMAIN ALIGNMENT 65+81.89	193928.4106	1833584.9155
F-24	45° VERT. BEND	FORCEMAIN ALIGNMENT 65+99.37	193926.1326	1833602.2485
F-25	45° VERT. BEND	FORCEMAIN ALIGNMENT 66+10.48	193924.6841	1833613.2698

STRUCTURE TABLE

NAME	STATION	NORTHING	EASTING	RIM EL
TRACER WIRE BOX 1	FORCEMAIN ALIGNMENT 5+00.00	198068.9814	1832511.6118	915.64
TRACER WIRE BOX 2	FORCEMAIN ALIGNMENT 11+59.62	197435.8683	1832347.4253	928.00
TRACER WIRE BOX 3	FORCEMAIN ALIGNMENT 16+59.72	196955.7569	1832223.4248	931.89
TRACER WIRE BOX 4	FORCEMAIN ALIGNMENT 21+89.73	196439.6499	1832102.8564	934.39
TRACER WIRE BOX 5	FORCEMAIN ALIGNMENT 25+77.62	196061.7348	1832015.4303	936.00
TRACER WIRE BOX 6	FORCEMAIN ALIGNMENT 30+67.43	195589.8776	1831928.3363	929.04
TRACER WIRE BOX 7	FORCEMAIN ALIGNMENT 35+83.62	195089.6600	1831813.3899	922.88
TRACER WIRE BOX 8	FORCEMAIN ALIGNMENT 43+34.62	194411.6110	1831725.5393	936.99
TRACER WIRE BOX 9	FORCEMAIN ALIGNMENT 48+40.62	194134.2782	1831928.2822	937.16
TRACER WIRE BOX 10	FORCEMAIN ALIGNMENT 53+40.62	194090.2681	1832426.3246	934.01
TRACER WIRE BOX 11	FORCEMAIN ALIGNMENT 58+40.62	194056.4392	1832925.1499	928.06
TRACER WIRE BOX 12	FORCEMAIN ALIGNMENT 66+04.48	193925.4659	1833607.3210	916.69

RECORD POINT TABLE

NORTHING	EASTING	C/L ELEVATION	DESCRIPTION
197754.81	1832437.95	918.41	45° HORZ. BEND VERT. DEF
197745.32	1832420.77	919.45	45° HORZ. BEND
197129.05	1832273.03	912.64	45° HORZ. BEND
197124.96	1832265.98	913.43	45° HORZ. BEND
196127.01	1832027.57	924.87	45° VERT. BEND
196092.84	1832048.56	922.63	45° VERT. BEND
195043.23	1831796.56	911.79	90° BEND
195024.02	1831869.52	910.55	90° BEND
194196.05	1831673.08	928.54	45° HORZ. BEND
194157.74	1831690.93	928.76	45° HORZ. BEND

RECORD POINT TABLE

NORTHING	EASTING	C/L ELEVATION	DESCRIPTION
194055.82	1832939.24	918.20	90° HORZ. BEND
193982.79	1832935.11	917.30	90° HORZ. BEND
193923.65	1833580.66	902.85	TEE
193926.21	1833600.92	902.91	45° VERT. BEND
198376.52	1832574.33	914.77	45° VERT. BEND
198378.58	1832576.03	907.27	PLUG
193934.32	1833581.31	904.07	VNORTH
193928.67	1833585.28	903.72	VEAST

RECORD POINT TABLE

NORTHING	EASTING	GRADE	DESCRIPTION
198381.33	1832579.21	916.48	TB1
197739.54	1832420.13	929.02	ARV1
197733.83	1832416.75	928.98	TB2
197133.86	1832280.42	924.89	TB3
196153.53	1832035.62	933.01	ARV2
196091.58	1832048.49	931.40	TB4
195634.61	1831938.66	926.89	TB5
195065.91	1831798.21	921.69	TB6
195024.74	1831870.62	922.23	TB7
194597.82	1831765.64	935.77	TB8
194269.59	1831691.07	937.94	TB13

RECORD POINT TABLE

NORTHING	EASTING	GRADE	DESCRIPTION
194149.68	1831748.71	938.06	ARV3
194148.52	1831773.65	937.96	TB9
194095.42	1832385.55	934.03	TB10
194053.12	1832920.02	927.25	TB11
193925.77	1833615.08	914.77	TB12
193923.73	1833619.82	918.21	OUTMH

RECORD DOCUMENT

THE ORIGINAL CONTRACT DOCUMENTS, PREPARED BY HDR (ENGINEER), HAVE BEEN MODIFIED TO INCORPORATE FIELD CHANGES MADE BY THE CONTRACTOR BASED ON AS-BUILT REDLINES PROVIDED BY THE CONTRACTOR AND OTHER DATA ASSOCIATED WITH CHANGES IN THE WORK AUTHORIZED BY THE CLIENT. THE ENGINEER REPRESENTS THAT THESE RECORD DRAWINGS HAVE BEEN PREPARED ON THE BASIS OF THIS INFORMATION PROVIDED TO THE ENGINEER, BUT MAKES NO REPRESENTATIONS AS TO THE ACCURACY OR COMPLETENESS OF SUCH INFORMATION.

ISSUE	DATE	DESCRIPTION
	02-07-2024	AS-BUILT
C	04-13-2021	ISSUED FOR CONSTRUCTION
B	01-12-2020	ADDENDUM
A	08-31-2020	ISSUED FOR BID

PROJECT MANAGER	KYLE SCHWIETERMAN
DESIGN BY	LCT
DRAWN BY	VKN
APPROVED BY	DLM
PROJECT NUMBER	10062733

DELAWARE COUNTY REGIONAL SEWER DISTRICT
50 CHANNING STREET, DELAWARE, OHIO 43015

PEACHBLOW PUMP STATION AND FORCEMAIN UPGRADE PROJECT

FORCEMAIN AND GRAVITY SEWER

CIVIL

TABLES

0 30' 60'
SCALE: 1"=30'

FILENAME C-13 - ALTERNATIVE.DWG
SCALE NOT TO SCALE

SHEET
C-13A